Fittings and accessories for lubrication systems

Product catalogue 2025

Navigation

Solderless pipe union with tapered sleeve 10

Solderless pipe union with cutting sleeve 38

Adapters, plugs and washers 70

Quick connectors 82

Manifolds 98

Tubes and hoses 100

Fixing material 116

Couplings 122

Valves 126

Pressure gauges 134

Reservoirs and trays 138

Lubricating nipples 142

Filters 146

Brushes 150

Tools 152

Manual grease guns 163

Refill pumps 166

Table of contents

Electronic part library 8

Lubricants suitable for lubrication systems 9

Tapered sleeve fittings acc. to DIN 3854/DIN 3862 10

Provision of counterbore 12

Form counterbores 14

Double-tapered sleeves for metal pipes 14

Socket unions for metal pipes acc. to DIN 3871 15

Reinforcing sockets for plastic tubes 15

Tapered sleeves for plastic tubes acc. to DIN 3862 16

Connectors with tapered thread 17

Connectors with cylindrical thread acc. to DIN 71428 18

Bracketed connectors 20

Tube-to-tube connector with air vent acc. to DIN 3862 21

T-connectors acc. to DIN 71433. 22

Bulkhead connectors with tapered thread 24

Tube-to-tube connectors. 24

Straight bulkhead fittings acc. to DIN 71429 25

Reducing piece 25

Threaded sockets. 26

Elbow bulkhead fittings acc. to DIN 71429 28

Elbows with cylindrical thread acc. to DIN 71433 28

Elbows with tapered thread acc. to DIN 71429 29

Elbows with tube end for pipe union for installation in counterbores acc. to DIN 3854/DIN 3862. 30

Banjo fittings acc. to DIN 71430 Form A 31

Banjo fittings acc. to DIN 71430 Form B 32

Banjo fittings acc. to DIN 71430 Form C 33

Banjo fittings acc. to DIN 71430 Form D 33

Banjo fittings, rotatable 34

Banjo fitting with indicator pin for lubricant distributor 34

Rotating joints 35

Cross joints. 36

High-pressure cutting sleeve unions acc. to ISO 8334-1 . . . 38

Overview of fitting types 39

Double-edged cutting sleeve union (DECS) 40

Double-edged cutting sleeves D acc. to DIN 3861/ISO 8434-1. 41

Union nuts M acc. to DIN 3861/ISO 8434-1. 42

Straight screw-in connectors GE with metrical thread. 43

Straight screw-in connectors GE with Whitworth pipe thread. 44

Straight screw-in connectors GE with Whitworth pipe thread, made from stainless steel or brass 45

Straight screw-in connectors GE with NPT pipe thread 45

Straight screw-in glands XGE 46

Straight tube-to-tube connectors G 46

Straight tube-to-tube reducing connectors GR. 47

Union studs GZ. 48

Straight tube studs EGE. 48

T-connectors T. 49

Reducing T-connectors TR 49

Elbow connectors W. 50

Elbow screw-in connectors WE with metrical thread 50

Elbow screw-in connectors WE with Whitworth pipe thread. 51

K-connectors K. 52

Female connector straight GAI with mectrical thread. 53

Female connector straight GAI with Whitworth pipe thread. 53

Check valves GERV. 54

Straight bulkhead connectors SV 56

Elbow bulkhead connectors WSV 56

Banjo fittings SWVE with metrical thread. 57

Banjo fittings SWVE with Whitworth pipe thread. 57

Banjo fittings WHK (high-pressure) with metrical thread 58

Banjo fittings WH and WHK (high-pressure) with Whitworth pipe thread. 58

Reducing connectors RED with cylindrical thread 59

Reducing connectors KOR
with cylindrical thread 59
Connectors for pressure gauges MAV 60
Connectors for pressure gauges MAVE 60
L-connectors EL
directionally adjustable 61
L-connectors EVL
directionally adjustable 61
Screw-in T-connectors TE, TH with metrical pipe thread 62
Screw-in T-connectors TE, TH with Whitworth pipe thread . . 62
Swivel nut branch ET 63
Swivel nut elbow EW 63
Swivels DVWE 64
Swivels DG 64
Blanking plug for cones BUZ 65

Soft-seal cutting sleeve union (SSCS) 66
Straight screw-in connectors GE. 67
Cone plugs VKA 67
Straight screw-in connectors with shortened thread
and function nut GE (short) 68
Straight bulkhead connectors with function nut SVZ 68
Straight connectors (tube to tube) with function nut GZ. 69
T-connectors with function nut TZ 69

Adapters, plugs and washers. 70
Reducing connectors with cylindrical thread
for operating pressures up to 45 bar
(sealed by flat washer acc. to DIN 7603) 72
Reducing connectors with tapered thread
for operating pressures up to 45 bar 72
Reducing connectors with cylindrical thread
for operating pressures up to 45 bar
(sealed by flat washer acc. to DIN 7603) 73
Adapter for pressure gauges
for operating pressures up to 45 bar
(sealed by flat washer acc. to DIN 7603) 73
Adapter for pressure gauges
with cylindrical thread for operating pressures up to 45 bar . . .74
Reducing connectors with tapered thread
for operating pressures up to 350 bar 74
Elbow reducing connectors 45°
with tapered thread for operating pressures up to 350 bar 75
Elbow reducing connectors 90°
with tapered thread for operating pressures up to 350 bar 75
Reducing connectors RI
with cylindrical thread for operating pressures up to 400 bar . .76
Banjo fittings, rotatable 77
Vent plugs with profile
seal acc. to ISO 9974-2 79
Vent plugs sealed by
flat washer acc. to DIN 7603 79
Screw plugs VSTI 80
Screw plugs sealed by
flat washer acc. to DIN 7603 80
Flat washers 81

Quick connectors 82
Single-seal quick connectors. 85
Straight screw-in connectors 85
Straight screw-in connectors
with FKM threaded seal 85
Adapters with tapered thread 86
Banjo fittings with tapered thread. 86
Elbows with tapered thread. 87
Banjo fittings with O-ring threaded seal 87
Banjo fittings with FKM threaded seal. 88
Banjo fittings with hexagon socket and O-ring threaded seal . 88
Screw-in T-connectors 89
T-connectors 90
Straight bulkhead connectors 90
Tube-to-tube connector 91

Triple-seal quick connectors 92
Straight screw-in connectors with cylindrical thread 93
Straight screw-in connectors with tapered thread 93
Tube-to-tube connectors. 94
Banjo fittings with banjo bolt and cylindrical thread 94
Elbows with tapered thread. 95
Banjo fittings with cylindrical thread 96
Banjo fittings with tapered thread. 97
Locking pin 97

Manifolds. 98
Metering device manifolds. 99

Tubes and hoses 100
Plastic tubing 102
Tube and hose protections 103
Steel tubing 104
Stainless steel tubing 105
Low-pressure hoses for main lines max. 45 bar with pipe stud on both ends 106
Low-pressure hoses for main lines max. 45 bar with tapered sleeve and socket union on both ends 107
Low-pressure hoses for main lines max. 45 bar with pipe stud on both ends and with claw groove for quick connectors 108
Low-pressure hoses for secondary lines max. 15 bar with pipe stud on both ends 109
Low-pressure hoses for secondary lines max. 15 bar with tapered sleeve and socket union on both ends 109
Low-pressure hoses for secondary lines max. 15 bar with pipe stud on both ends and claw groove for quick connectors 110
Low-pressure hoses suitable for self-installation max. 45 bar 111
High-pressure hoses for self-installation 112
Threaded joints for high-pressure hoses 113

Fixing material 116
Fixing clips 117
Pipe brackets acc. to DIN 3015 120
Cable straps 120
Mounting base 121
Fixing bolts 121

Couplings 122
Low-pressure quick-disconnect couplings 123
Medium- and high-pressure quick-disconnect couplings . . . 123
High-pressure couplings 124
Couplings with return flow port 125

Valves 126
Relief valve 127
Relief valves with bleed valve and safety valve 127
Pressure regulating valves, adjustable (poppet valve) 128
Adapters for valves 128
Pressure regulating valves, fixed pressure 129
Pressure relief/regulating valves for flow rates from 0.5–2 l/min 131
Shut-off valves 131
Solenoid valves 133

Pressure gauges 134
Standard pressure gauges 135
Pressure gauges with metrical thread 135
Damped pressure gauges with glycerin filling 136
Damped pressure gauges with glycerin filling and visualization in red/green 136
Damped pressure gauges with restrictor 137
High-pressure gauges 137

Reservoirs 138
Plastic reservoirs 139
Oil trough with shut-off valve 140
Metal reservoirs 141
Oil level gauges for metal reservoirs 141

Lubricating nipples 142
Hydraulic grease nipples according to DIN 71412 143
Button-head grease nipples according DIN 3404 143
Lubrication fitting block 144
Holder with lubricating nipple and fitting 144
Lubrication nipple manifolds 145
Lubricating nipple box 145

Filters **146**
Screen filters for oil and fluid grease 147
Filter elements for oil and fluid grease filters. 147
Screen filters for grease 148
Filter elements for grease filter units. 149

Brushes **150**
UC, 233, 068874 151
Support for brushes. 151

Tools **152**
Pipe cutter 153
Tube bender 155
Tube bending fix 156
Tube cutter 157
Grease pump set for pressure and function check 158
Drum plug wrench 159
Socket wrench insert for elbows 160
Mounting stud for hose couplings 161

Manual grease guns **162**
Manual grease filler guns. 163
PowerLuber 164

Refill pumps **166**
Filler cylinder 167
Manual and pneumatic filling pumps 169 168
Manual refilling pump MFP 170
Air-operated barrel pump Lubrigun 172
Compact grease transfer pump GTP-C 174
Grease transfer pump GTP 176
Electric filling pump EFFP 178

Cross reference list **180**
Index **182**

Electronic part library

CAD product data

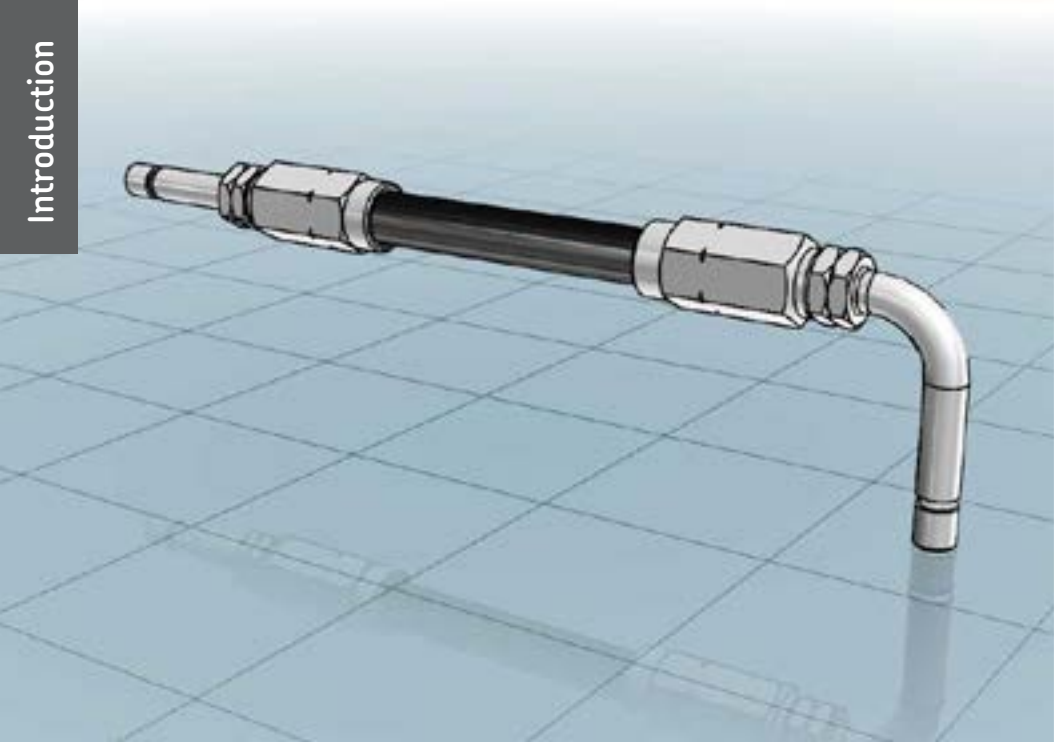

Find your parts online

3D CAD data, technical drawings and data sheets of SKF fittings and accessories are now available in native format in the online parts library. In addition to enjoying easy CAD downloads, you can configure more complex lubrication system products and integrate them into your design process – completely free of charge. Integrate CAD data seamlessly into your layout plans without any delay.

https://skf-lubrication.partcommunity.com

Lubricants suitable for lubrication systems

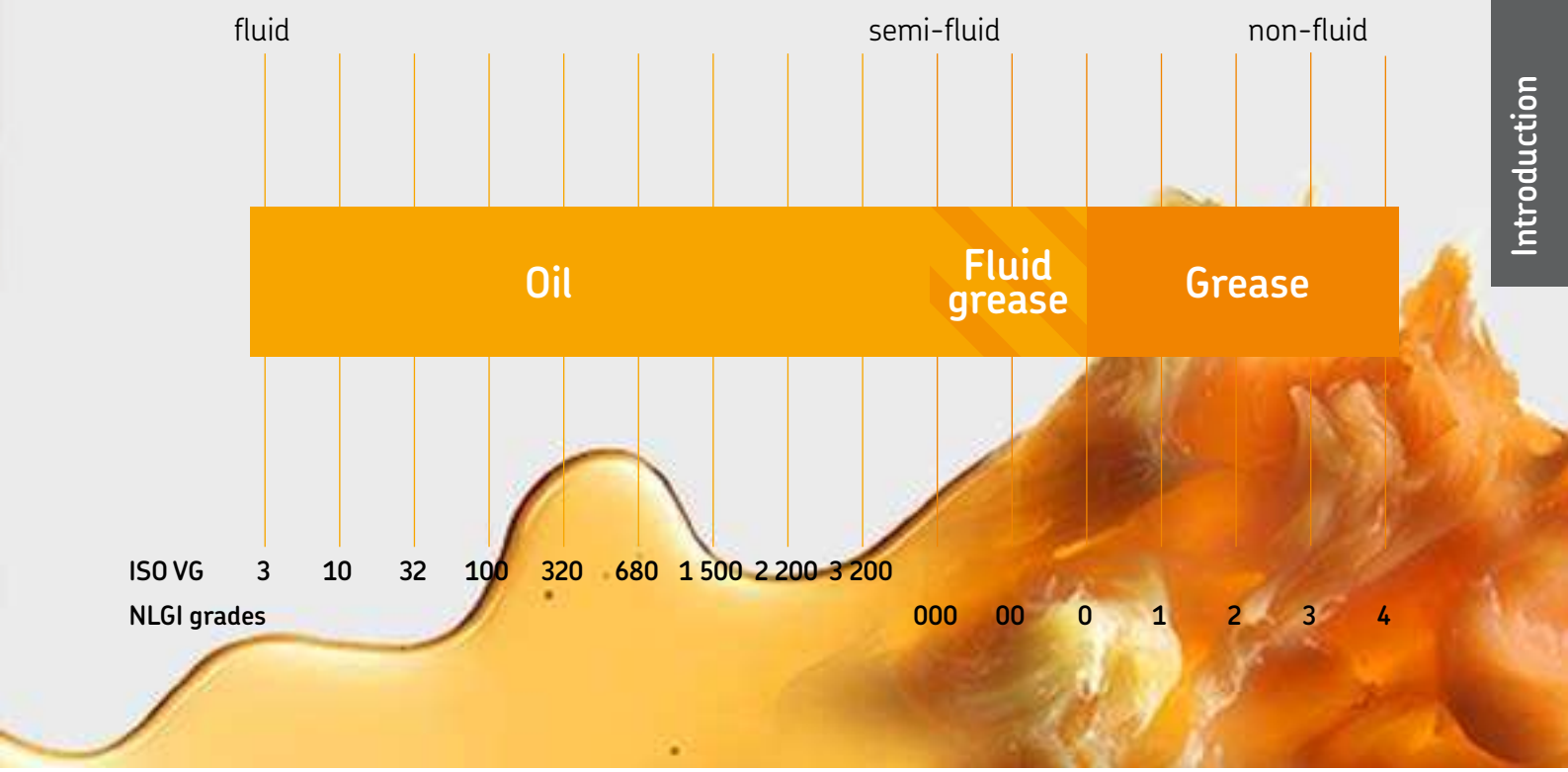

Oil and fluid grease

The viscosity is an expression of a fluid's internal friction. Oils are classified in ISO VG viscosity classes from 2 to 3 200. NLGI grade 000, 00 and 0 greases are called fluid greases. Different types of oils are available, including mineral oils, organic oils and synthetic oils. A compatibility check is recommended prior to using any oil with SKF lubrication systems.

Grease

Greases are consistent lubricants (NLGI grade 1–6). They are soft to hard, triple-component mixtures of a base oil as the lubricating fluid, a thickening agent and additives. In most instances, greases of NLGI grade 1 up to 3 are suitable for use in a lubrication system. A compatibility check should be made prior to using any grease with SKF lubrication systems.

Tapered sleeve fittings acc. to DIN 3854/DIN 3862

Low-pressure fittings for max. 45 bar

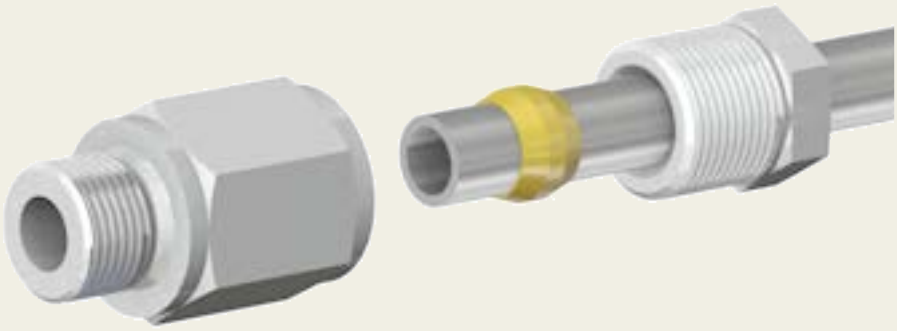

Description

Solderless pipe unions for metal and plastic pipes are designed for low pressure oil, fluid grease and grease lubrication systems with pressures up to 45 bar and an operating temperature range from -25 to 80 °C. Depending on the selection of metering pipe material, there are two different types of tapered sleeve fittings with different components available: Tapered sleeve fittings for plastic pipes and double-cone sleeve fittings for metal pipes. For both types of unions, a counterbore acc. to DIN 3862 is necessary.

Features and benefits

- Cost-efficient connection solution for low-pressure systems
- Suitable for oil, fluid grease and grease
- Simple and user-friendly assembly
- Virtually leakage-free union

Applications

- Paper and packaging industry
- Food and beverage industry
- Assembly and automation
- Part assembly lines
- Injection molding
- Mobile on-road
- Machine tools
- Etc.

Tapered sleeve fittings acc. to DIN 3854/DIN 3862

Provision of counterbore

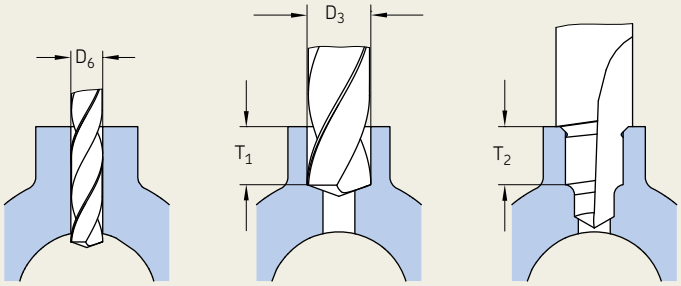

1 predrill holes

2 predrill hole to be tapped

3 counterbore with form counterbore up to the stop

Form counterbore enlarges bore hole diam. D_4 to core hole for ISO thread.

Counterbores for solderless tube connection (DIN 3854/DIN 3862)

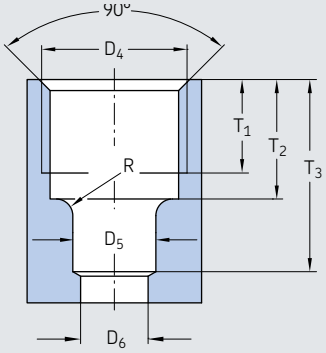

Description of counterbores

SKF offers a wide range of tapered sleeve fittings with counterbores according to DIN 3862. In addition, it also is possible also to create counterbores by using offered tools as form counterbores.

Applications

- Small-to-medium machine tools
- Mobile on-road (fleet vehicles, on-road transport)
- Assembly and automation
- Food packaging
- Part assembly lines
- Injection molding

Description	Tube∅	$∅D_5^{B11}$	$∅D_6$	$∅D_4$	T_1	T_2	T_3	R
	mm	mm	mm	mm	mm	mm	mm	mm
1102 1)	2,5	2,5	1,5	M6×0,75	4,5	5,5	8,5	1,3
1404	4	4	3	M8×1	6,5	8,5	12,5	1,6
1406	6	6	4,5	M10×1	7	9	14	1,6
1408	8	8	6,5	M14×1,5	9	11,5	18,5	1,6
1410	10	10	8,5	M16×1,5	9	11,5	19,5	1,6
1412	12	12	10,5	M18×1,5	9,5	12	22	1,6

1) not shown in DIN standard

Important note for provision of counterbore:

When using a hand drill, take care not to tilt the counterbore out of the drill axis. To avoid damage, drill steadily without interruption. Increase pressure slightly at the stop.

Unions for metal pipes

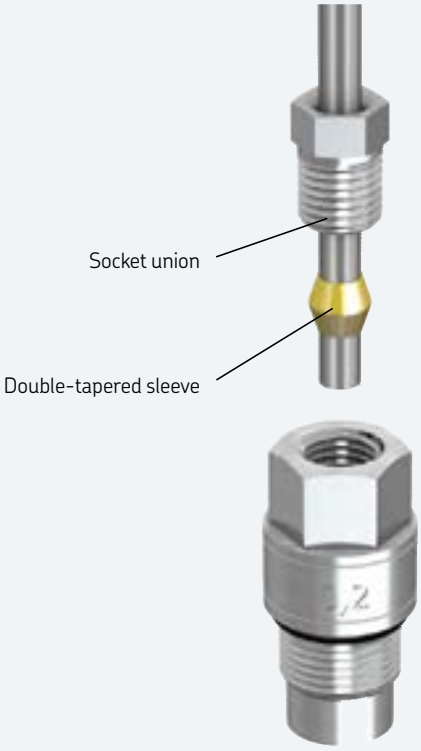

Unions for plastic pipes

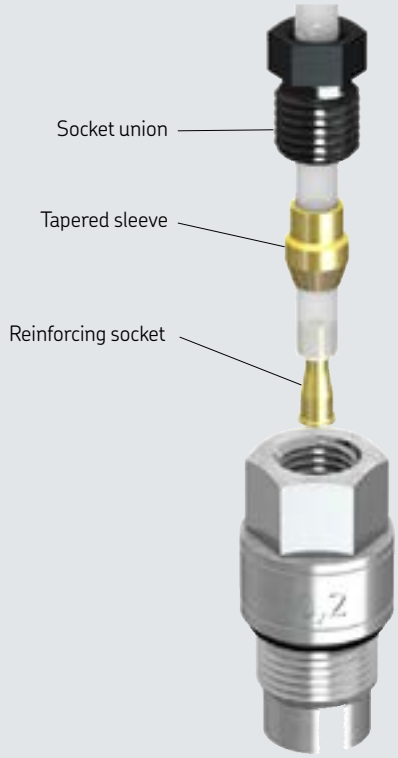

Solderless pipe unions for metal pipes

Description

Solderless pipe unions for metal pipes consist of a socket union, a double-cone sleeve and a fitting with counterbore according to DIN 2862.

Initial assembly

Cut the metal pipe straight to length using a suitable tool, e.g., a pipe cutter. Push the socket union and the double-cone sleeve onto the end of the metal pipe. Insert the end of the metal pipe into the depression until the stop and tighten the socket union finger-tight. Then tighten the socket union again by a maximum of $1\,^1/_2$ revolutions.

Repeat assembly

After each time the screw union is loosened, the socket union must be firmly retightened (with the same force) as in the initial assembly.

Solderless pipe unions for plastic pipes

Description

Solderless pipe unions for plastic pipes consist of a socket union, a tapered sleeve, a reinforcing socket and a fitting with counterbore according to DIN 2862.

Initial assembly

Cut the plastic pipe straight to length using a suitable tool, e.g., a hose cutter. Insert the reinforcing socket into the end of the plastic pipe to stabilize the end of the pipe being assembled. This prevents the plastic pipe from being constricted during assembly. Push the socket union and the tapered sleeve onto the end of the plastic pipe. Insert the end of the plastic pipe into the depression until the stop and tighten the socket union finger-tight. Then tighten the socket union again by a maximum of $1\,^1/_2$ revolutions.

Repeat assembly

Each time after the screw union is loosened, the socket union must be firmly retightened (with the same force) as in the initial assembly.

Solderless pipe union with tapered sleeve

Form counterbores

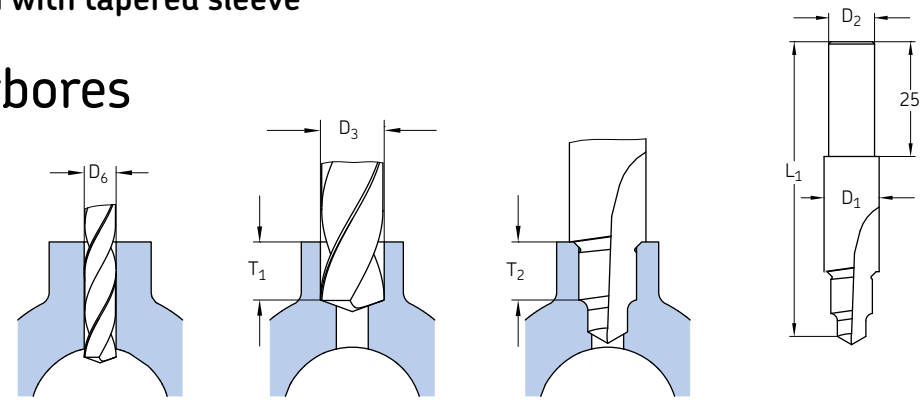

Order number	Tube∅	for counterbores	L_1	D_1	D_2	Twistdrill D_6	D_3	T_1	T_2
	mm		mm	mm	mm	mm	mm	mm	mm
902-111	2,5	1102	60,5	10	10	1,5	5	4,5	5,5
904-411	4	1404	65	10	10	3	6,5	7,5	8,5
906-411	6	1406	66	12	10	4,5	8,5	8	9
908-411	8	1408	70	16	10	6,5	12	10,5	11,5
910-411	10	1410	72	18	10	8,5	14	10,5	11,5
912-411	12	1412	75	20	10	10,5	16	11	12

Double-tapered sleeves for metal pipes

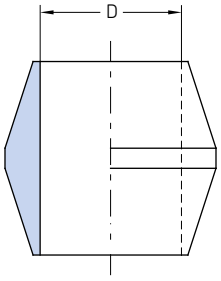

Order number	Designation	Tube∅ D	Material	Weight	
		mm		g	*lb*
Brass					
402-001 [1]	DOUBLE CONE RING MS D 2,5	2,5	Brass	21	*0.05*
404-001	DOUBLE CONE RING MS D 4,0	4	Brass	34	*0.07*
406-001	DOUBLE CONE RING MS D 6,0	6	Brass	66	*0.15*
408-001	DOUBLE CONE RING MS D 8,0	8	Brass	80	*0.18*
410-001	DOUBLE CONE RING MS D10,0	10	Brass	100	*0.22*
412-001	DOUBLE CONE RING MS D12,0	12	Brass	120	*0.26*
Stainless steel					
404-001-S3	DOUBLE CONE RING VA D 4,0	4	Stainless steel 1.4305	34	*0.07*
406-001-S3	DOUBLE CONE RING VA D 6,0	6	Stainless steel 1.4305	66	*0.15*
408-001-S3	DOUBLE CONE RING VA D 8,0	8	Stainless steel 1.4305	80	*0.18*

[1] not shown in DIN standard

Solderless pipe union with tapered sleeve

Socket unions for metal pipes acc. to DIN 3871

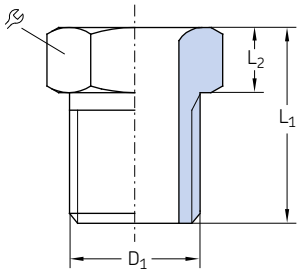

Order number	Designation		Tube∅	D_1	L_1	L_2		Material	Weight (100 pcs)	
			mm	mm	mm	mm	mm		g	*lb*
Steel, galvanized										
402-002	COMP.NUT	ST D 2,5 M 6x0,75 ZN	2,5	M6×0,75	9	3	7	Steel, galvanized	166	*0.37*
404-002	COMP.NUT	ST D 4,0 M 8x1,0 ZN	4	M8×1	12	4	8	Steel, galvanized	300	*0.66*
406-002	COMP.NUT	ST D 6,0 M10x1,0 ZN	6	M10×1	13	4	10	Steel, galvanized	400	*0.88*
408-202	COMP.NUT	ST D 8,0 M14x1,5 ZN	8	M14×1,5	16	4,5	14	Steel, galvanized	1 000	*2.21*
410-002	COMP.NUT	ST D10,0M16x1,5 ZN	10	M16×1,5	17	5,5	17	Steel, galvanized	1 400	*3.09*
412-002	COMP.NUT	ST D12,0 M18x1,5 ZN	12	M18×1,5	18	6	19	Steel, galvanized	1 800	*3.97*
Stainless steel										
404-002-S3	COMP.NUT	VA D 4,0 M 8x1,0	4	M8×1	12	4	8	Stainless steel 1.4305	300	*0.66*
406-002-S3	COMP.NUT	VA D 6,0 M10x1,0	6	M10×1	13	4	10	Stainless steel 1.4305	400	*0.88*
408-202-S3	COMP.NUT	VA D 8,0 M14x1,5	8	M14×1,5	16	4,5	14	Stainless steel 1.4305	1 000	*2.21*

Reinforcing sockets for plastic tubes

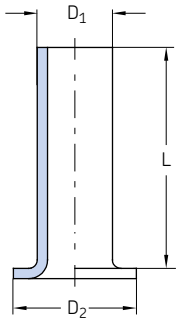

Order number	Designation	Tube∅	D_1	D_2	L	Material	Weight	
		mm	mm	mm	mm		g	*lb*
402-603	INLET BUSHING MS F.TUBE D 2,5x0,5	2,5×0,5	1,4	2,3	8	Brass	5	*0.01*
404-603	INLET BUSHING MS F.TUBE D 4,0x0,85	4×0,85	2,2	3,8	10	Brass	8	*0.02*
406-603	INLET BUSHING MS F.TUBE D 6x1,0	6×1	3,9	5,8	12	Brass	12	*0.03*
406-613	INLET BUSHING MS F.TUBE D 6x1,25	6×1,25	3,4	5,8	12	Brass	15	*0.03*
408-603	INLET BUSHING MS F.TUBE D 8x1,25	8×1,25	5,4	7,8	15	Brass	20	*0.04*
410-603	INLET BUSHING MS F.TUBE D10x1,5	10×1,5	6,9	9,8	18	Brass	24	*0.05*
412-603	INLET BUSHING MS F.TUBE D12x1,5	12×1,5	8,9	11,8	20	Brass	26	*0.06*

Solderless pipe union with tapered sleeve

Tapered sleeves for plastic tubes acc. to DIN 3862

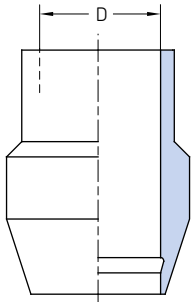

Order number	Designation	Tube∅ D	Material	Weight (100 pcs)	
		mm		g	*lb*
402-611	TAPER CUTT.RING MS D 2,5	2,5	Brass	100	*0.22*
404-611	TAPER CUTT.RING MS D 4,0	4	Brass	120	*0.26*
406-611	TAPER CUTT.RING MS D 6,0	6	Brass	160	*0.35*
408-611	TAPER CUTT.RING MS D 8,0	8	Brass	200	*0.44*
410-611	TAPER CUTT.RING MS D10,0	10	Brass	250	*0.55*
412-611	TAPER CUTT.RING MS D12,0	12	Brass	300	*0.66*

Socket unions for plastic tubes acc. to DIN 3871

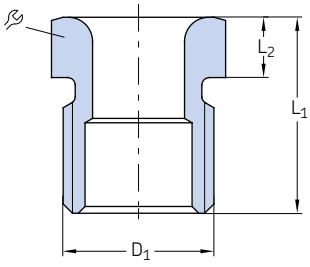

Order number	Designation		Tube∅	D_1	L_1	L_2		Material	Weight (100 pcs)	
			mm	mm	mm	mm	mm		g	*lb*
Steel, black finished										
402-612	COMP.NUT	ST D 2,5 M 6x0,75	2,5	M6 ×0,75	9	3	7	Steel, black finished	100	*0.22*
404-612	COMP.NUT	ST D 4,0 M 8x1,0	4	M8×1	12	4	8	Steel, black finished	200	*0.44*
406-612	COMP.NUT	ST D 6,0 M10x1,0	6	M10 ×1	13	4	10	Steel, black finished	300	*0.66*
408-612	COMP.NUT	ST D 8,0 M14x1,5	8	M14 ×1,5	16	4,5	14	Steel, black finished	900	*1.98*
410-612	COMP.NUT	ST D10,0 M16x1,5	10	M16×1,5	17	5,5	17	Steel, black finished	1 300	*2.87*
412-612	COMP.NUT	ST D12,0 M18x1,5	12	M18 ×1,5	18	6	19	Steel, black finished	1 700	*3.75*
Brass										
404-612-MS	COMP.NUT	MS D 4,0 M 8x1,0	4	M8 ×1	12	4	8	Brass	200	*0.44*
406-612-MS	COMP.NUT	MS D 6,0 M10x1,0	6	M10 ×1	13	4	10	Brass	300	*0.66*
408-612-MS	COMP.NUT	MS D 8,0 M14x1,5	8	M14×1,5	16	4,5	14	Brass	900	*1.98*
410-612-MS	COMP.NUT	MS D10,0 M16x1,5	10	M16 ×1,5	17	5,5	17	Brass	1 300	*2.87*

Solderless pipe union with tapered sleeve

Connectors with tapered thread

Tapered threads are used without washers; sealed by tapered outer thread and sealant according to DIN 3852-1.

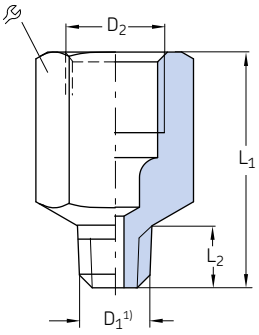

Order number	Designation	Tube∅	D_1 [1]	D_2	L_1	L_2		Material	Weight	
		mm		mm	mm	mm	mm		g	*lb*
402-003K	CONNECTING PIECE ST D 2,5 M 6x0,75K ZN	2,5	M6×0,75 tap.	M6×0,75	11,5	4,5	8	Steel, galvanized	2	*0.004*
402-006K	CONNECTING PIECE ST D 2,5 M 8x1,0K ZN	2,5	M8×1 tap.	M6×0,75	15	8	9	Steel, galvanized	5	*0.011*
402-008K	CONNECTING PIECE ST D 2,5 M10x1,0K ZN	2,5	M10×1 tap.	M6×0,75	16	7,5	12	Steel, galvanized	11	*0.024*
404-662K	CONNECTING PIECE ST D 4,0 M 6K ZN	4	M6 tap.	M8×1	19	5	11	Steel, galvanized	8	*0.018*
404-663K	CONNECTING PIECE ST D 4,0 M 6K ZN	4	M6 tap.	M8×1	20	6	11	Steel, galvanized	8	*0.018*
404-673K	CONNECTING PIECE ST D 4,0 M 6x0,75K ZN	4	M6×0,75 tap.	M8×1	20	6	11	Steel, galvanized	8	*0.018*
404-047K	CONNECTING PIECE ST D 4,0 M 7K ZN	4	M7 tap.	M8×1	20	6	11	Steel, galvanized	9	*0.02*
404-003K	CONNECTING PIECE ST D 4,0 M 8x1,0K ZN	4	M8×1 tap.	M8×1	17	7,4	11	Steel, galvanized	6	*0.013*
404-045	CONNECTING PIECE ST D 4,0 M 8x1,0K ZN	4	M8×1 tap.	M8×1	62,5	7,4	11	Steel, galvanized	40	*0.088*
404-006K	CONNECTING PIECE ST D 4,0 M10x1,0K ZN	4	M10×1 tap.	M8×1	16	7,4	11	Steel, galvanized	7	*0.015*
401-004-512	CONNECTING PIECE ST D 4,0 M10x1,0K ZN	4	M10×1 tap.	M8×1	25	7,4	11	Steel, galvanized	14	*0.031*
404-040K	CONNECTING PIECE ST D 4,0 R1/8K ZN	4	R 1/8	M8×1	16	6	11	Steel, galvanized	7	*0.015*
404-040K-US	CONNECTING PIECE ST D 4,0 1/8NPTF ZN	4	1/8 NPTF	M8×1	20	6,7	11	Steel, galvanized	10	*0.022*
404-054K	CONNECTING PIECE ST D 4,0 R1/4K ZN	4	R 1/4	M8×1	14	9	14	Steel, galvanized	11	*0.024*
404-072	CONNECTING PIECE ST D 4,0 1/4 28UNF ZN	4	1/4-28 UNF	M8×1	20	5,6	11	Steel, galvanized	9	*0.02*
401-004-903	CONNECTING PIECE ST D 4,0 1/4BSF ZN	4	1/4 BSF	M8×1	20	5	11	Steel, galvanized	9	*0.02*
401-004-904	CONNECTING PIECE ST D 4,0 3/16BSF ZN	4	1/6 BSF	M8×1	18	5	11	Steel, galvanized	7	*0.015*
406-004K	CONNECTING PIECE ST D 6,0 M10x1,0K ZN	6	M10×1 tap.	M10×1	23	7,4	14	Steel, galvanized	20	*0.044*
456-004K	CONNECTING PIECE ST D 6,0 R1/8K ZN	6	R 1/8	M10×1	21	6	14	Steel, galvanized	15	*0.033*
406-054K	CONNECTING PIECE ST D 6,0 R1/4K ZN	6	R 1/4	M10×1	20	9	17	Steel, galvanized	22	*0.049*

[1] Tapered thread according to DIN 158. short, resp. according to DIN 2999.

Solderless pipe union with tapered sleeve

Connectors with cylindrical thread acc. to DIN 71428

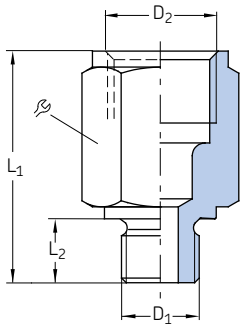

Order number	Designation	Tube∅	D_1	D_2	L_1	L_2		Material	Weight	
		mm		mm	mm	mm	mm		g	*lb*
Steel, galvanized										
402-004	CONNECTING PIECE ST D 2,5 M 6 ZN	2,5	M6	M6×0,75	13	5,5	9	Steel, galvanized	3	*0.007*
402-003	CONNECTING PIECE ST D 2,5 M 6x0,75 ZN	2,5	M6×0,75	M6×0,75	13	5,5	9	Steel, galvanized	3	*0.007*
402-006	CONNECTING PIECE ST D 2,5 M 8x1,0 ZN	2,5	M8×1	M6×0,75	15	7,5	11	Steel, galvanized	7	*0.015*
404-004	CONNECTING PIECE ST D 4,0 M 8x1,0 ZN	4	M8×1	M8×1	24	14	11	Steel, galvanized	9	*0.02*
404-005	CONNECTING PIECE ST D 4,0 M 8x1,0 ZN	4	M8×1	M8×1	32	22	11	Steel, galvanized	14	*0.031*
404-061	CONNECTING PIECE ST D 4,0 M 5 ZN	4	M5	M8×1	20	5,5	11	Steel, galvanized	9	*0.02*
404-063	CONNECTING PIECE ST D 4,0 M 8 ZN	4	M8	M8×1	22	8	11	Steel, galvanized	10	*0.022*
404-003	CONNECTING PIECE ST D 4,0 M 8x1,0 ZN	4	M8×1	M8×1	18	7,5	11	Steel, galvanized	6	*0.013*
404-006	CONNECTING PIECE ST D 4,0 M10x1,0 ZN	4	M10×1	M8×1	18	7,5	14	Steel, galvanized	13	*0.029*
404-040	CONNECTING PIECE ST D 4,0 G1/8A ZN	4	G 1/8 A	M8×1	18	8	14	Steel, galvanized	13	*0.029*
404-162	CONNECTING PIECE ST D 4,0 M12x1,0 ZN	4	M12×1	M8×1	18	9	17	Steel, galvanized	19	*0.042*
404-164	CONNECTING PIECE ST D 4,0 M14x1,5 ZN	4	M14×1,5	M8×1	18	9	17	Steel, galvanized	21	*0.046*
406-158	CONNECTING PIECE ST D 6,0 M 8x1,0 ZN	6	M8×1	M10×1	23	7,5	14	Steel, galvanized	38	*0.084*
406-004	CONNECTING PIECE ST D 6,0 M10x1 ZN	6	M10×1	M10×1	18	7,5	14	Steel, galvanized	10	*0.022*
406-162	CONNECTING PIECE ST D 6,0 M12x1,0 ZN	6	M12×1	M10×1	19	9	17	Steel, galvanized	18	*0.04*
406-054	CONNECTING PIECE ST D 6,0 G1/4A ZN	6	G 1/4 A	M10×1	20	10	17	Steel, galvanized	20	*0.044*
301-005	CONNECTING PIECE ST D 6,0 M14x1,5 ZN	6	M14×1,5	M10×1	18	9	17	Steel, galvanized	18	*0.04*
406-166	CONNECTING PIECE ST D 6,0 M16x1,5 ZN	6	M16×1,5	M10×1	19	9	19	Steel, galvanized	28	*0.062*
406-055	CONNECTING PIECE ST D 6,0 G3/8A ZN	6	G 3/8 A	M10×1	21	10	22	Steel, galvanized	41	*0.09*
408-004	CONNECTING PIECE ST D 8,0 M10×1 ZN	8	M10×1	M14×1,5	28	7,5	17	Steel, galvanized	25	*0.055*
408-154	CONNECTING PIECE ST D 8,0 G1/8A ZN	8	G 1/8A	M14×1,5	29	8	17	Steel, galvanized	26	*0.057*
408-160	CONNECTING PIECE ST D 8,0 G1/4A ZN	8	G 1/4 A	M14×1,5	30	16	17	Steel, galvanized	22	*0.049*
408-162	CONNECTING PIECE ST D 8,0 M12×1 ZN	8	M12×1	M14×1,5	29	9	17	Steel, galvanized	26	*0.057*
301-020	CONNECTING PIECE ST D 8,0 G1/4A ZN	8	G 1/4 A	M14×1,5	23	10	17	Steel, galvanized	16	*0.035*
301-001	CONNECTING PIECE ST D 8,0 M14×1,5 ZN	8	M14×1,5	M14×1,5	26	9	17	Steel, galvanized	23	*0.051*
408-005	CONNECTING PIECE ST D 8,0 M16×1,5 ZN	8	M16×1,5	M14×1,5	22	9	19	Steel, galvanized	30	*0.066*
408-006	CONNECTING PIECE ST D 8,0 M18×1,5 ZN	8	M18×1,5	M14×1,5	22	10	22	Steel, galvanized	40	*0.088*
408-022	CONNECTING PIECE ST D 8,0 M22×1,5 ZN	8	M22×1,5	M14×1,5	24	12	27	Steel, galvanized	71	*0.157*
Brass										
267-001.17	CONNECTING PIECE MS D 6,0 G1/4A	6	G 1/8 A	M10×1	24	8	14	Brass	18	*0.04*
406-163	CONNECTING PIECE MS D 6,0 M12x1	6	M12×1	M10×1	19	9	17	Brass	20	*0.044*
D301-005-MS	CONNECTING PIECE MS D 6,0 M14x1,5	6	M14×1,5	M10×1	20	9	17	Brass	24	*0.053*
406-167	CONNECTING PIECE MS D 6,0 M16x1,5	6	M16×1,5	M10×1	19	9	19	Brass	31	*0.068*
267-001.19	CONNECTING PIECE MS D 6,0 M18x1,5	6	M18×1,5	M10×1	21	10	22	Brass	71	*0.157*
D408-004-MS	CONNECTING PIECE MS D 8,0 M10x1	8	M10×1	M14×1,5	29	7,5	17	Brass	29	*0.064*
D301-001-MS	CONNECTING PIECE MS D 8,0 M14×1,5	8	M14×1,5	M14×1,5	28	9	17	Brass	29	*0.064*
D301-020-MS	CONNECTING PIECE MS D 8,0 G1/4A	8	G 1/4 A	M14×1,5	30	10	17	Brass	30	*0.066*
267-001.13	CONNECTING PIECE MS D 8,0 G1/2A	8	G 1/2 A	M14×1,5	24	12	27	Brass	71	*0.157*
Stainless steel										
301-005-S3	CONNECTING PIECE VA D 6,0 M14x1,5	6	M14×1,5	M10×1	18	9	17	Stainless steel 1.4305	19	*0.042*
406-004-S3	CONNECTING PIECE VA D 6,0 M10x1,0	6	M10×1	M10×1	18	7,5	14	Stainless steel 1.4305	10	*0.022*
406-158-S3	CONNECTING PIECE VA D 6,0 M 8x1,0	6	M8×1	M10×1	23	7,5	14	Stainless steel 1.4305	15	*0.033*
301-020-S3	CONNECTING PIECE VA D 6,0 G1/4A	8	G 1/4 A	M14×1,5	23	10	17	Stainless steel 1.4305	17	*0.037*

Solderless pipe union with tapered sleeve

Connectors with cylindrical thread acc. to DIN 71428

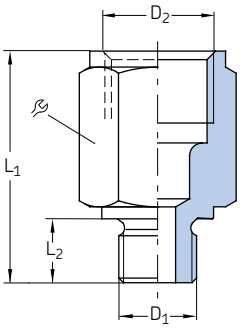

Order number	Designation	Tube ∅	D_1	D_2	L_1	L_2		Material	Weight	
		mm		mm	mm	mm	mm		g	*lb*
410-160	CONNECTING PIECE ST D10,0 M10x1,0 ZN	10	M10×1	M16×1,5	30	7.5	19	Steel, galvanized	32	*0.071*
410-162	CONNECTING PIECE ST D10,0 M12x1,0 ZN	10	M12×1	M16×1,5	31	9	19	Steel, galvanized	30	*0.066*
410-163	CONNECTING PIECE ST D10,0 G1/4A ZN	10	G 1/4 A	M16×1,5	30	10	19	Steel, galvanized	30	*0.066*
410-164	CONNECTING PIECE ST D10,0 M14x1,5 ZN	10	M14×1,5	M16×1,5	29	9	19	Steel, galvanized	30	*0.066*
410-169	CONNECTING PIECE ST D10,0 G1/4A ZN	10	G 1/4 A	M16×1,5	52	16	19	Steel, galvanized	32	*0.071*
410-004	CONNECTING PIECE ST D10,0 M16x1,5 ZN	10	M16×1,5	M16×1,5	23	9	19	Steel, galvanized	21	*0.046*
410-018	CONNECTING PIECE ST D10,0 M18x1,5 ZN	10	M18×1,5	M16×1,5	24	10	22	Steel, galvanized	37	*0.082*
410-171	CONNECTING PIECE ST D10,0 G1/2A ZN	10	G 1/2 A	M16×1,5	24	12	27	Steel, galvanized	58	*0.128*
410-022	CONNECTING PIECE ST D10,0 M22x1,5 ZN	10	M22×1,5	M16×1,5	24	12	27	Steel, galvanized	64	*0.141*
412-162	CONNECTING PIECE ST D12,0 M12x1,0 ZN	12	M12×1	M18×1,5	35	9	22	Steel, galvanized	52	*0.115*
412-163	CONNECTING PIECE ST D12,0 G1/4A ZN	12	G 1/4A	M18×1,5	35	10	22	Steel, galvanized	51	*0.112*
412-164	CONNECTING PIECE ST D12,0 M14x1,5 ZN	12	M14×1,5	M18×1,5	33	9	22	Steel, galvanized	46	*0.101*
412-169	CONNECTING PIECE ST D12,0 G1/4A ZN	12	G 1/4 A	M18×1,5	41	16	22	Steel, galvanized	49	*0.108*
412-004	CONNECTING PIECE ST D12,0 M18x1,5 ZN	12	M18×1,5	M18×1,5	24	10	22	Steel, galvanized	28	*0.062*
412-014	CONNECTING PIECE ST D12,0 M22x1,5 ZN	12	M22×1,5	M18×1,5	26	12	27	Steel, galvanized	63	*0.139*

Solderless pipe union with tapered sleeve

Bracketed connectors

504-004

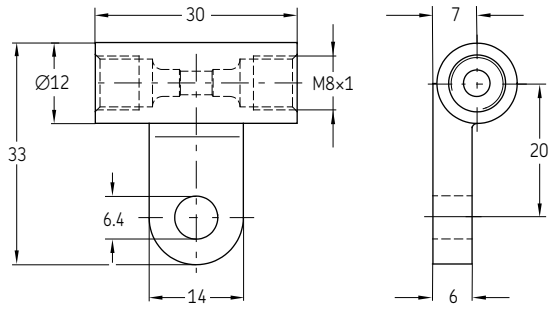

506-010

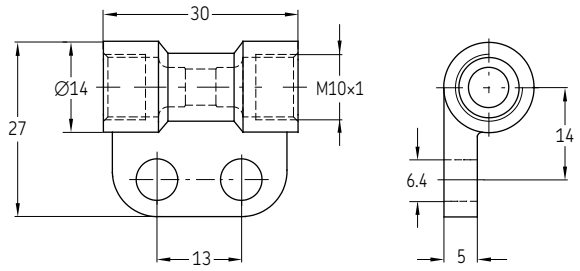

Order number	Designation	Tube∅	Material	Weight	
		mm		g	*lb*
Die-cast zinc **504-004**	TUBE FITTING ZN G4+BRACKET	4	Die-cast zinc	26	*0.06*
Brass **506-010**	TUBE FITTING MS G6+BRACKET	6	Brass	30	*0.07*

DAR506, DAR508

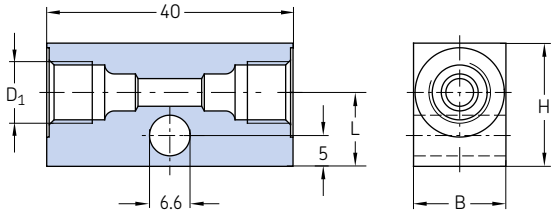

DAR510, DAR510-S1

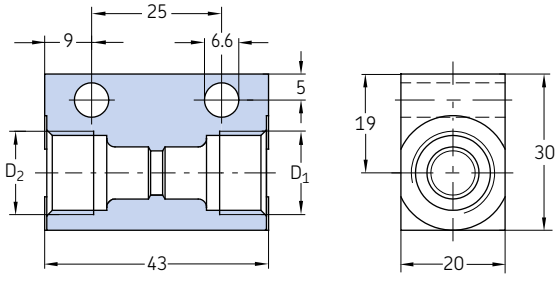

Order number	Designation	Tube∅	D_1	D_2	B	H	L_1	Material	Weight	
		mm	mm	mm	mm	mm	mm		g	*lb*
Aluminum										
DAR506	TUBE CONNECTOR,AL 2x M10x1	6	M10×1	–	15	20	12	Aluminum	26	*0.06*
DAR508	TUBE CONNECTOR,AL 2x M14x1	8	M14×1,5	–	20	25	15	Aluminum	41	*0.09*
Steel, galvanized										
DAR510	TUBE CONNECTOR,ST 2x M16x1 ZN	10	M16×1,5	M16×1,5	–	–	–	Steel, galvanized	140	*0.31*
DAR510-S1	TUBE CONNECT.,ST 1x M14x1,5/1x M16x1,5ZN	8 /10	M14×1,5	M16×1,5	–	–	–	Steel, galvanized	150	*0.33*

Solderless pipe union with tapered sleeve

Bracketed connectors

DAR524

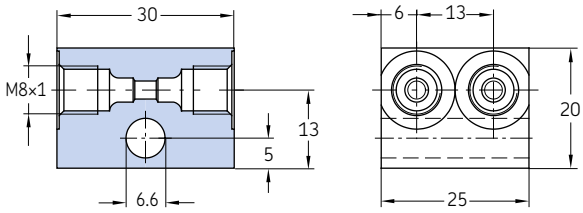

DAR534

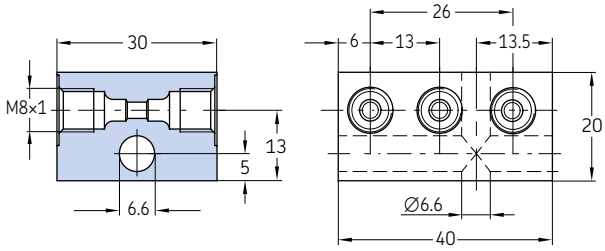

Order number	Designation	Tube∅	Material	Weight	
		mm		g	*lb*
DAR524	TUBE CONNECTOR,ST DOUBLE 4x M 8x1 ZN	4	Steel, galvanized	90	*0.2*
DAR534	TUBE CONNECTOR,ST TRIPLE 6x M 8x1 ZN	4	Steel, galvanized	150	*0.33*

Tube-to-tube connector with air vent acc. to DIN 3862

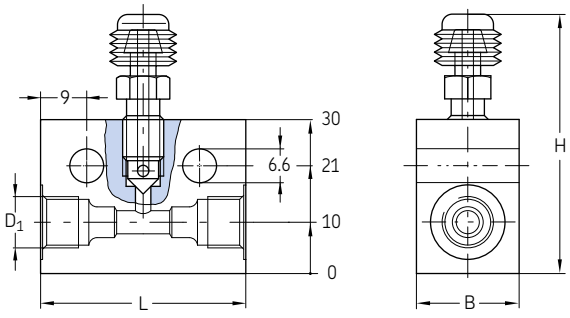

Order number	Designation	Tube∅	D_1	B	H	L_1	Material	Weight	
		mm	mm	mm	mm	mm		g	*lb*
995-001-104	TUBE FITTING AL G4 M 8x1,0 VENT.DEVICE	4	M8×1	20	50	40	Aluminum	68	*0.15*
995-001-106	TUBE FITTING AL G6 M10x1,0 VENT.DEVICE	6	M10×1	20	50	40	Aluminum	49	*0.11*

Solderless pipe union with tapered sleeve

T-connectors acc. to DIN 71433

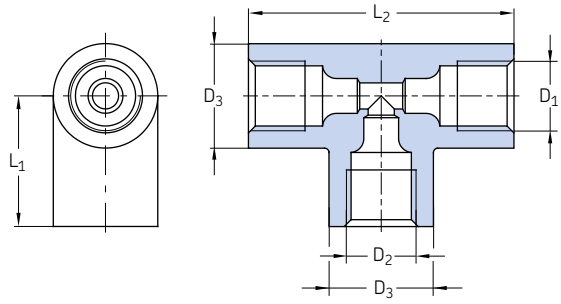

Order number	Designation	Tube∅	D_1	D_2	D_3	L_1	L_2	Form	Material	Weight	
		mm	mm	mm	mm	mm	mm			g	*lb*
504-008	TUBE FITTING ZN T4 M 8x1,0	4	M8×1	M8×1	12	15	30,5	A	Die-cast zinc	20	*0.04*
506-008	TUBE FITTING ZN T6 M10x1,0	6	M10×1	M10×1	14	18	36	A	Die-cast zinc	31	*0.07*
510-102	TUBE FITTING ZN T10 M16x1,5	10	M16×1,5	M16×1,5	20	25	50	A	Die-cast zinc	62	*0.14*
506-408	TUBE FITTING ZN TR6/4 M10x1,0	6/4	M10×1	M8×1	14	18	36	B	Die-cast zinc	33	*0.07*

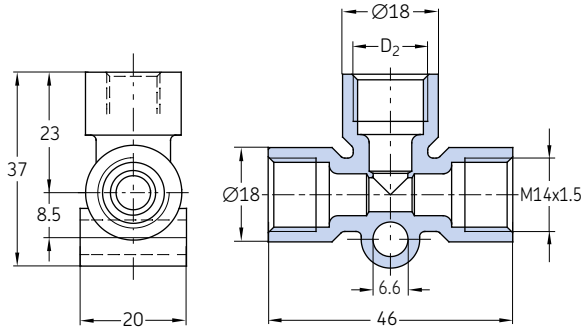

Order number	Designation	Tube∅	D_2	Form	Material	Weight	
		mm	mm			g	*lb*
508-602-2	TUBE FITTING ZN TR8/6	8/6	M10×1	B	Die-cast zinc	58	*0.13*
508-002-2	TUBE FITTING ZN TR8	8	M14×1,5	A	Die-cast zinc	50	*0.11*

Solderless pipe union with tapered sleeve

T-connectors acc. to DIN 71433

504-045

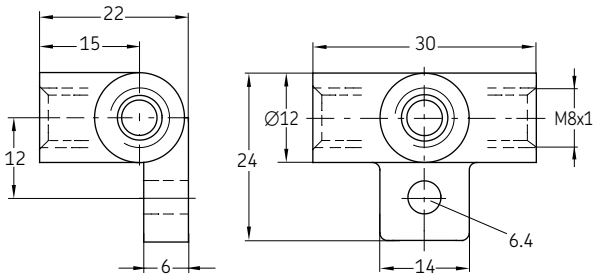

DY964

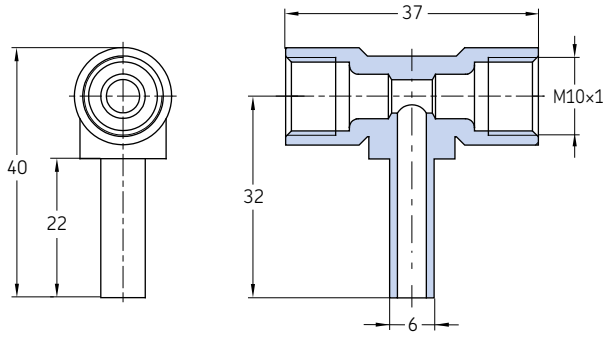

Order number	Designation	Tube∅	Material	Weight	
		mm		g	*lb*
504-045	TUBE FITTING ZN T4	4	Die-cast zinc	26	*0.06*
DY964	TUBE FITTING MS T6	6	Brass	38	*0.08*

DAT506 – DAT510

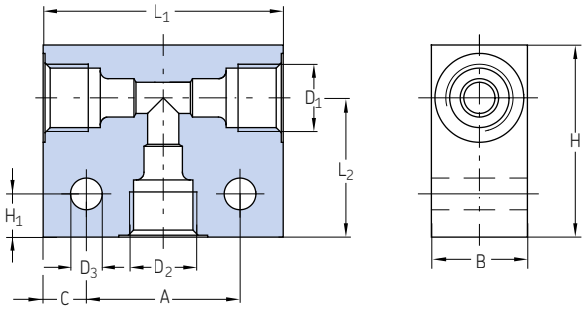

DAT510-S1

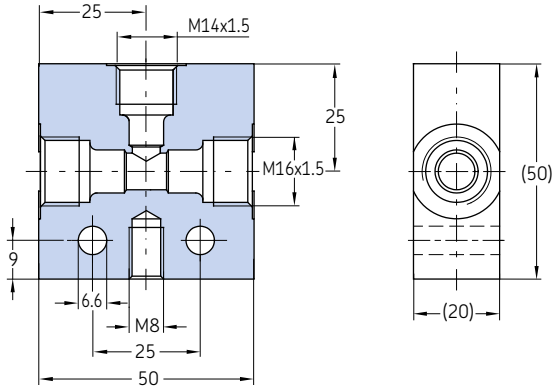

Order number	Designation	Tube ∅	D_1	D_2	D_3	A	B	C	H	H_1	L_1	L_2	Form	Material	Weight	
		mm	mm	mm	mm	mm	mm	mm	mm	mm	mm	mm			g	*lb*
Aluminum																
DAT506	TEE,AL 3x M10x1	6	M10×1	M10×1	6,6	22	20	9	30	9	40	20	A	Aluminum	55	*0.12*
DAT508	TEE,AL 3x M14x1,5	8	M14×1,5	M14×1,5	6,6	32	20	9	40	9	50	29	A	Aluminum	90	*0.2*
DAT512	TEE,AL 3x M18x1,5	12	M18×1,5	M18×1,5	6,6	42	25	9	40	9	60	29	A	Aluminum	123	*0.27*
DAT510-S5	TEE,AL 2x M16x1,5/1x M14x1,5	6	M16×1,5	M10×1	7	25	25	13,5	40	15	52	29	B	Aluminum	120	*0.26*
Steel, galvanized																
DAT510	TEE,ST 3x M16x1,5 ZN	10	M16×1,5	M16×1,5	7	25	20	13,5	40	15	52	29	A	Steel, galv.	230	*0.51*
DAT510-S1	TEE,ST 2x M16x1,5/1x M14x1,5 ZN	8 (1×), 10 (2×)	M16×1,5	M14×1,5	6,6	25	20	12,5	50	9	50	25	B	Steel, galv.	306	*0.67*

Solderless pipe union with tapered sleeve

Bulkhead connectors with tapered thread

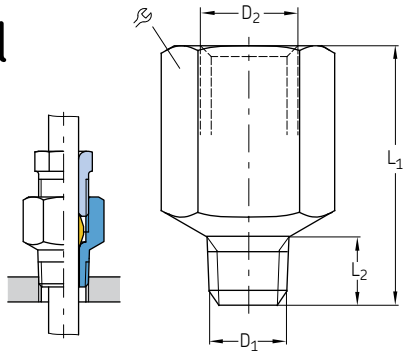

Order number	Designation	Tube∅	D_1 [1]	D_2	L_1	L_2		Material	Weight	
		mm	mm	mm	mm	mm	mm		g	*lb*
404-003DK	ADAPTER ST 4 M 8x1,0 ZN	4	M8×1 tap.	M8×1	17	7,4	11	Steel, galvanized	6	*0.013*
404-006DK	ADAPTER ST 4 M10x1,0 ZN	4	M10×1 tap.	M8×1	16	7,4	11	Steel, galvanized	7	*0.015*
406-004DK	ADAPTER ST 6 M10x1,0 ZN	6	M10×1 tap.	M10×1	18	7,4	14	Steel, galvanized	10	*0.022*
301-001DK	ADAPTER ST 8 M14x1,5 ZN	8	M14×1,5 tap.	M14×1,5	24	11	17	Steel, galvanized	19	*0.042*
410-004DK	ADAPTER ST10 M16x1,5 ZN	10	M16×1,5 tap.	M16×1,5	24	11	19	Steel, galvanized	22	*0.049*

[1] Tapered thread according to DIN 158 tap. short.

Tube-to-tube connectors

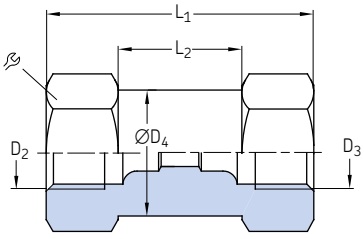

Order number	Designation	Tube∅	D_2	D_3	∅D_4	L_1	L_2		Material	Weight	
		mm	mm	mm	mm	mm	mm	mm		g	*lb*
404-010	TUBE FITTING ST G 4 ZN	4	M8×1	M8×1	10,8	27	13	11	Steel, galvanized	14	*0.03*
406-010	TUBE FITTING ST G 6 ZN	6	M10×1	M10×1	13,8	30	10	14	Steel, galvanized	25	*0.06*
406-805	TUBE FITTING ST GR 6/8 ZN	6 /8	M14×1,5	M10×1	16,8	35	11	17	Steel, galvanized	43	*0.09*
408-010	TUBE FITTING ST G 8 ZN	8	M14×1,5	M14×1,5	16,8	40	14	17	Steel, galvanized	40	*0.09*
410-010	TUBE FITTING ST G 10 ZN	10	M16×1,5	M16×1,5	18,8	42	13	19	Steel, galvanized	54	*0.12*
412-010	TUBE FITTING ST G 12 ZN	12	M18×1,5	M18×1,5	21,8	48	18	22	Steel, galvanized	85	*0.19*

Solderless pipe union with tapered sleeve

Straight bulkhead fittings acc. to DIN 71429

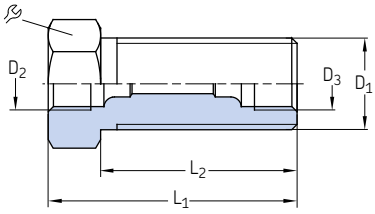

Order number	Designation	Tube∅	D_1 1)	D_2	D_3	L_1	L_2		Material	Weight	
		mm	mm	mm	mm	mm	mm	mm		g	*lb*
404-008	TUBE FITTING ST SV 4 M14x1,5 ZN	4	M14×1,5	M8×1	M8×1	27	19	17	Steel, galvanized	30	*0.07*
404-009	TUBE FITTING ST SV 4 M14x1,5 ZN	4	M14×1,5	M8×1	M8×1	38	30	17	Steel, galvanized	39	*0.09*
406-008	TUBE FITTING ST SV 6 M14x1,5 ZN	6	M14×1,5	M10×1	M10×1	30	20	17	Steel, galvanized	30	*0.07*
406-005	TUBE FITTING ST SV 6/8 M16x1,5 ZN	6 /8	M16×1,5	M14×1,5	M10×1	35	23	19	Steel, galvanized	38	*0.08*
408-008	TUBE FITTING ST SV 8 M20x1,5 ZN	8	M20×1,5	M14×1,5	M14×1,5	40	28	24	Steel, galvanized	75	*0.17*
410-008	TUBE FITTING ST SV10 M20x1,5 ZN	10	M20×1,5	M16×1,5	M16×1,5	42	27	24	Steel, galvanized	73	*0.16*
412-008	TUBE FITTING ST SV12 M24x1,5 ZN	12	M24×1,5	M18×1,5	M18×1,5	48	33	27	Steel, galvanized	114	*0.25*

Reducing piece

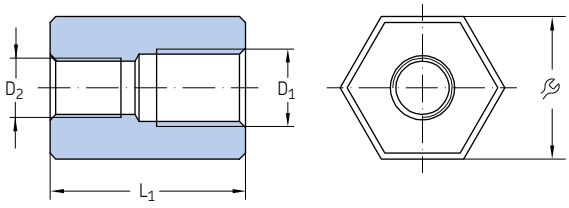

Order number	Designation	Tube∅	D_1	D_2	L_1		Material	Weight	
		mm	in	mm	mm	mm		g	*lb*
44-1755-2019	TB.STUD RED ST 4 G1/4I xM10x1I SW24 ZN	4	G 1/4	M10×1	33	24	Steel, galvanized	100	*0.22*

Solderless pipe union with tapered sleeve

Threaded sockets

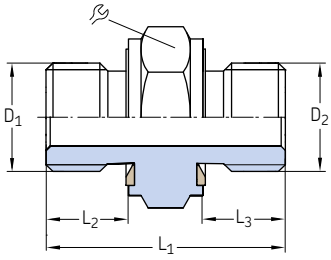

Order number	Designation	D_1	D_2	L_1	L_2	L_3		Seals	Material	Weight	
		in	in	mm	mm	mm	mm			g	*lb*
402-116-161	THREADED PIECE ST L29 G1/4A ZN	G 1/4 A	G 1/4 A	29	10	10	19	NBR	Steel, galvanized	30	*0.07*
402-116-165	THREADED PIECE ST L37 G1/2 ZN	G 1/2	G 1/2	37	10	12	32	NBR	Steel, galvanized	100	*0.22*

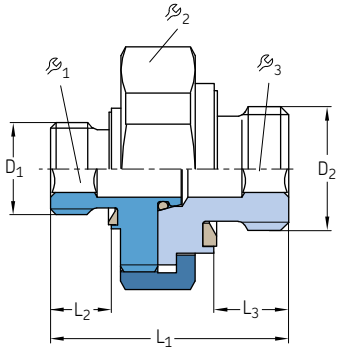

Order number	Designation	D_1	D_2	L_1	L_2	L_3	1	2	3	Seals	Material	Weight	
				mm	mm	mm	mm	mm	mm			g	*lb*
Steel, galvanized													
995-014-014	CONNECTOR ST G1/4A-G1/4A ZN	G 1/4 A	G 1/4 A	26	8	8	4	24	5	NBR	Steel, galvanized	40	*0.09*
Brass													
995-340-000	CONNECTOR MS M10x1,M10x1	M10×1	M10×1	19,5	6,5	6,5	4	16	4	NBR	Brass	13	*0.03*
995-340-350	CONNECTOR MS M10x1,M12x1	M10×1	M12×1	21	6,5	7,2	4	19	5	NBR	Brass	20	*0.04*
995-350-000	CONNECTOR MS M12x1,M12x1	M12×1	M12×1	21,5	7	7,2	5	19	5	NBR	Brass	20	*0.04*
995-340-000-S8	CONNECTOR MS M10x1,M10x1	M10×1	M10×1	19,5	6,5	6,5	4	16	4	FKM	Brass	13	*0.03*
995-340-350-S8	CONNECTOR MS M10x1,M12x1	M10×1	M12×1	21	6,5	7,2	4	19	5	FKM	Brass	18	*0.04*
995-350-000-S8	CONNECTOR MS M12x1,M12x1	M12×1	M12×1	21,5	7	7,2	5	19	5	FKM	Brass	22	*0.05*

Solderless pipe union with tapered sleeve

Threaded sockets

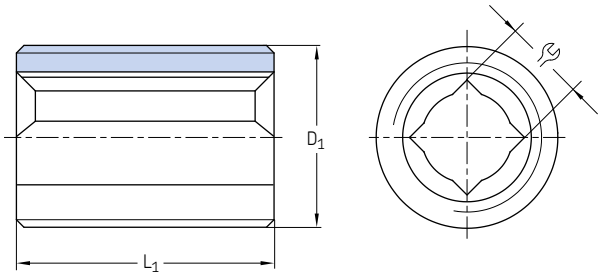

Order number	Designation	D_1	L_1		Material	Weight	
			mm	mm		g	*lb*
Steel							
404-203	THREADED PIECE ST L13 M 8x1,0	M8×1	13	3,5	Steel	3	*0.007*
406-203	THREADED PIECE ST L15 M10x1,0	M10×1	15	3,5	Steel	6	*0.013*
406-243-B [1]	THREADED PIECE ST L18 M10x1,0	M10×1	18	3,5	Steel	7	*0.015*
408-243-B [1]	THREADED PIECE ST L19 M12x1,0	M12×1	19	5,5	Steel	9	*0.02*
458-012	THREADED PIECE ST L17 M12x1,0	M12×1	17	5,5	Steel	8	*0.018*
458-012-B [1]	THREADED PIECE ST L17 M12x1,0	M12×1	17	5,5	Steel	8	*0.018*
408-023	THREADED PIECE ST L18 M14x1,5	M14×1,5	18	5,5	Steel	13	*0.029*
410-003	THREADED PIECE ST L19 M16x1,5	M16×1,5	19	7	Steel	16	*0.035*
410-003-B [1]	THREADED PIECE ST L19 M16x1,5	M16×1,5	19	7	Steel	17	*0.037*
Stainless steel							
408-033-S3	THREADED PIECE VA L15 G1/4A	G 1/4 A	15	5,5	Stainless steel 1.4305	9	*0.02*

[1] Coated with microencapsulated adhesive

406-103, 408-103, 853-750-024

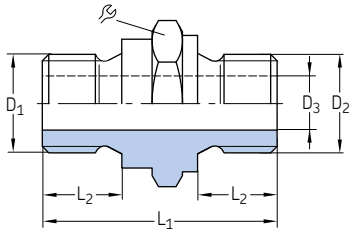

406-233

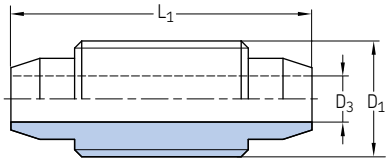

Order number	Designation	D_1	D_2	D_3	L_1	L_2		Material	Weight	
				mm	mm	mm	mm		g	*lb*
Steel, galvanized										
406-103	THREADED PIECE ST L20 M10x1,0xM12x1,0 ZN	M10×1	M12×1	5	20	6	14	Steel, galvanized	14	*0.03*
408-103	THREADED PIECE ST L21 M12x1,0xM14x1,5 ZN	M12×1	M14×1,5	6	21	7	17	Steel, galvanized	21	*0.05*
853-750-024	THREADED PIECE ST L31 G1/4Ax G1/4A ZN	G 1/4 A	G 1/4 A	7	31	10,5	19	Steel, galvanized	29	*0.06*
Brass										
406-233	THREADED PIECE MS L26 M10x1,0	M10×1	–	4	26	–	–	Brass	8	*0.02*

Solderless pipe union with tapered sleeve

Elbow bulkhead fittings acc. to DIN 71429

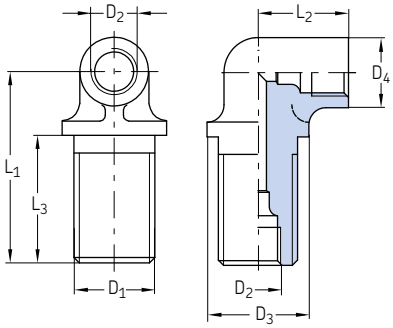

Order number	Designation	Tube∅	D_1	D_2	D_3	D_4	L_1	L_2	L_3	Material	Weight	
		mm	mm	mm	mm	mm	mm	mm	mm		g	*lb*
Die-cast zinc												
504-003	TUBE FITTING ZN WSV 4 M14x1,5	4	M14×1,5	M8×1	18	12	33	16	22	Die-cast zinc	30	*0.07*
Brass												
504-103	TUBE FITTING MS WSV 4 M14x1,5	4	M14×1,5	M8×1	18	12	33	18	22	Brass	46	*0.1*
506-004	TUBE FITTING MS WSV 6 M14x1,5	6	M14×1,5	M10×1	16,5	14	27	17,5	15	Brass	41	*0.09*

Elbows with cylindrical thread acc. to DIN 71433

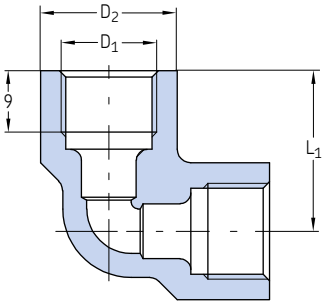

Order number	Designation	Tube∅	D_1	D_2	L_1	Material	Weight	
		mm	mm	mm	mm		g	*lb*
408-013	TUBE FITTING ZN W 8 M14x1,5	8	M14×1,5	20	23,5	Die-cast zinc	40	*0.09*
410-013	TUBE FITTING ZN W10M16x1,5	10	M16×1,5	21	26	Die-cast zinc	58	*0.13*

Solderless pipe union with tapered sleeve

Elbows with tapered thread acc. to DIN 71429

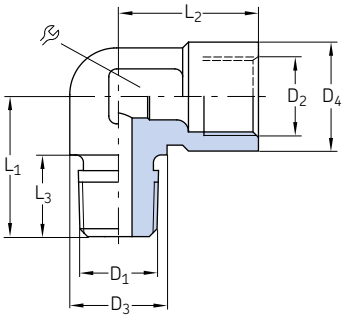

Order number	Designation	Tube∅	D_1 [1]	D_2	D_3	D_4	L_1	L_2	L_3		Material	Weight	
		mm		mm	mm	mm	mm	mm	mm	mm		g	*lb*
504-510K	TB.FITT.,ANGLE D4 M10X1,0KAXM 8X1 I ZN	4	M10×1 tap.	M8×1	13	13	21	16	10	14	Die-cast zinc	24	*0.05*
514-018K	TB.FITT.,ANGLE D4 R 1/8KA XM 8X1 I ZN	4	R 1/8	M8×1	13	13	21	16	10	14	Die-cast zinc	23	*0.05*
506-508K	TB.FITT.,ANGLE D6 M 8X1,0KAXM10X1 I ZN	6	M8×1 tap.	M10×1	12,5	14	18	18	10,5	14	Die-cast zinc	18	*0.04*
506-510K	TB.FITT.,ANGLE D6 M10X1,0KAXM10X1 I ZN	6	M10×1 tap.	M10×1	12,5	14	18	18	10,5	14	Die-cast zinc	20	*0.04*
506-511-K	TB.FITT.,ANGLE D6 R 1/8KA XM10X1 I ZN	6	R 1/8	M10×1	12,5	14	18	18	10,5	14	Die-cast zinc	20	*0.04*
506-512K	TB.FITT.,ANGLE D6 M12X1,0KAXM10X1 I ZN	6	M12×1 tap.	M10×1	12,5	14	18	18	10,5	14	Die-cast zinc	21	*0.05*
508-512K	TB.FITT,ANGLE D8 M12X1,0KAXM14X1,5 I ZN	8	M12×1 tap.	M14×1,5	14	19,5	19,5	24	10	14	Die-cast zinc	34	*0.07*

[1] Tapered thread according to DIN 158 tap. short, resp. according to DIN 2999.

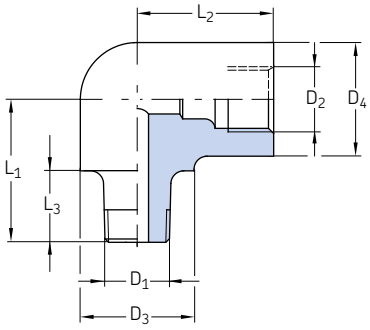

Order number	Designation	Tube∅	D_1 [1]	D_2	D_3	D_4	L_1	L_2	L_3	Material	Weight	
		mm		mm	mm	mm	mm	mm	mm		g	*lb*
Steel												
502-206K	ELBOW PIPE ST 2,5 M 6K	2,5	M6 tap.	M6×0,75	–	8	10	9,5	6	Steel	6	*0.01*
403-006-651	ELBOW PIPE ST 6 R1/4K	6	R 1/4	M10×1	14	14	17	17,5	8,5	Steel	32	*0.07*
Brass												
506-202K	ELBOW PIPE MS 6 M10x1,0K	6	M10×1 tap.	M10×1	17	17	22	21	11	Brass	60	*0.13*

[1] Tapered thread according to DIN 158 tap. short, resp. according to DIN 2999.

Solderless pipe union with tapered sleeve

Elbows with tapered thread acc. to DIN 71429

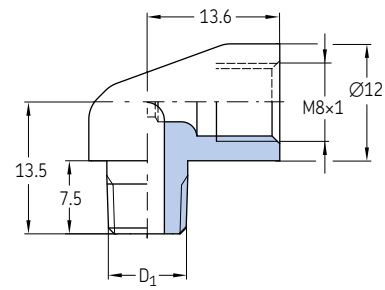

Order number	Designation	Tube∅	D_1 [1]	Material	Weight	
		mm			g	*lb*
504-200K	ELBOW PIPE MS 4 M 6K	4	M6 tap.	Brass	14	*0.03*
504-201K	ELBOW PIPE MS 4 M 8x1,0K	4	M8×1 tap.	Brass	20	*0.04*
504-202K	ELBOW PIPE MS 4 M10x1,0K	4	M10×1 tap.	Brass	16	*0.04*
504-203K	ELBOW PIPE MS 4 M 6x0,75K	4	M6x0.75 tap.	Brass	14	*0.03*
514-018K-S1	ELBOW PIPE MS 4 R1/8K	4	R 1/8	Brass	20	*0.04*

[1] Tapered thread according to DIN 158. short, resp. according to DIN 2999.

Elbows with tube end for pipe union for installation in counterbores acc. to DIN 3854/DIN 3862

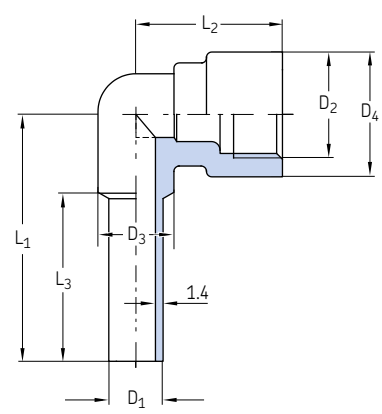

Order number	Designation	Tube∅	D_1	D_2	D_3	D_4	L_1	L_2	L_2	Material	Weight	
		mm	mm	mm	mm	mm	mm	mm	mm		g	*lb*
DY958	ELBOW PIPE MS D6	6	6	M10×1	8	14	30,8	21	22	Brass	*23*	*0.05*
DY960	ELBOW PIPE MS D8	8	8	M14×1,5	11	18	37	24,5	27	Brass	*37*	*0.08*
DY961	ELBOW PIPE MS D10	10	10	M16×1,5	15	23	42,5	26,5	29	Brass	*73*	*0.16*
DY962	ELBOW PIPE MS D12	12	12	M18×1,5	15	23	46	26,5	32	Brass	*62*	*0.14*

Solderless pipe union with tapered sleeve

Banjo fittings acc. to DIN 71430 Form A

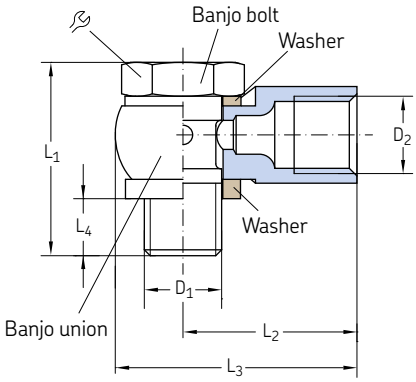

Order number	Designation	Tube∅ D_1		D_2	L_1	L_2	L_3	L_4		Banjo bolt	Banjo union	Weight (total)	
		mm		mm	mm	mm	mm	mm	mm			g	*lb*
Steel, galvanized													
502-161 [1]	TUBE FITTING SWVE 2,5 M 6	2,5	M6	M6×0,75	20	13	19	4,5	9	**502-056**	**502-051**	11	*0.02*
502-101 [1]	TUBE FITTING SWVE 2,5 M 6x0,75	2,5	M6×0.75	M6×0,75	18	13	19	5	9	**502-053**	**502-051**	10	*0.02*
502-102 [1]	TUBE FITTING SWVE 2,5 M 8x1,0	2,5	M8×1	M6×0,75	20	14	21	6,5	11	**502-054**	**502-052**	15	*0.03*
504-161 [1]	TUBE FITTING SWVE 4 M 6	4	M6	M8×1	20	17	24	4.1	9	**502-056**	**504-651**	15	*0.03*
504-162 [1]	TUBE FITTING SWVE 4 M 6x0,75	4	M6×0.75	M8×1	18	17	24	4,5	9	**502-053**	**504-651**	14	*0.03*
504-411 [1]	TUBE FITTING SWVE 4 M 8	4	M8	M8×1	23	18	25	7,5	11	**502-154**	**504-851**	20	*0.04*
504-401 [1]	TUBE FITTING SWVE 4 M 8x1,0	4	M8×1	M8×1	20	18	25	5,9	11	**502-054**	**504-851**	17	*0.04*
Steel, galvanized bolt and die-cast zinc union													
504-101	TUBE FITTING SWVE 4 M 8x1,0	4	M8×1	M8×1	26	18	25	6,5	11	**504-073**	**504-072**	23	*0.05*
504-102	TUBE FITTING SWVE 4 M10x1,0	4	M10×1	M8×1	26	19	27,5	6,5	14	**504-054**	**504-052**	30	*0.07*
504-108	TUBE FITTING SWVE 4 G1/8A	4	G 1/8 A	M8×1	27	19	27,5	6,8	14	**504-027**	**504-052**	32	*0.07*
506-140	TUBE FITTING SWVE 6 M10x1,0	6	M10×1	M10×1	26	21	28,5	6,5	14	**504-054**	**506-033**	33	*0.07*
506-142	TUBE FITTING SWVE 6 M12x1,0	6	M12×1	M10×1	34	25	35.2	7,5	17	**558-012**	**506-030**	60	*0.13*
506-012	TUBE FITTING SWVE 6 M14x1,5	6	M14×1,5	M10×1	34	25	35.2	7,5	17	**508-006**	**506-005**	60	*0.13*
506-145	TUBE FITTING SWVE 6 M16x1,5	6	M16×1,5	M10×1	35	30	41	8,7	19	**510-017**	**506-034**	90	*0.20*
506-108	TUBE FITTING SWVE 6 G1/8A	6	G 1/8 A	M10×1	27	21	28,5	7	14	**504-027**	**506-033**	33	*0.07*
506-214	TUBE FITTING SWVE 6 G1/4A	6	G 1/4 A	M10×1	35	25	35,2	8,5	17	**508-023**	**506-005**	60	*0.13*
508-142	TUBE FITTING SWVE 8 M12x1,0	8	M12×1	M14×1,5	34	27	37	7,5	17	**558-012**	**508-030**	63	*0.14*
508-144	TUBE FITTING SWVE 8 M14x1,5	8	M14×1,5	M14×1,5	34	27	37	7,5	17	**508-006**	**508-007**	61	*0.13*
508-145	TUBE FITTING SWVE 8 M16x1,5	8	M16×1,5	M14×1,5	35	30	41	8,7	19	**510-017**	**508-054**	80	*0.18*
508-024	TUBE FITTING SWVE 8 G1/4A	8	G 1/4 A	M14×1,5	35	27	37	8,5	17	**508-023**	**508-007**	59	*0.13*
510-142	TUBE FITTING SWVE 10 M12x1,0	10	M12×1	M16×1,5	34	30	40	7,5	17	**558-012**	**510-041**	70	*0.15*
510-145	TUBE FITTING SWVE 10 M16x1,5	10	M16×1,5	M16×1,5	35	30	41	10,7	19	**510-017**	**510-044**	80	*0.18*
510-024	TUBE FITTING SWVE 10 G1/4A	10	G 1/4 A	M16×1,5	35	30	40	7,5	17	**508-023**	**510-023**	65	*0.14*

[1] Miniature design, banjo union steel

Solderless pipe union with tapered sleeve

Banjo fittings acc. to DIN 71430 Form B

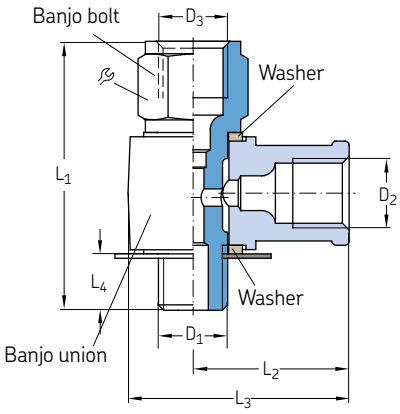

Order number	Designation	Tube ∅	D_1	D_2	D_3	L_1	L_2	L_3	L_4		Banjo bolt	Banjo union	Weight (total)	
		mm		mm	mm	mm	mm	mm	mm				g	*lb*
Steel, galvanized bolt and die-cast zinc union														
504-114	TUBE FITTING LE 4 M 8x1,0	4	M8×1	M8×1	M8×1	31	18	25,5	6,5	11	**504-075**	**504-072**	24	*0.05*
504-115	TUBE FITTING LE 4 M10x1,0	4	M10×1	M8×1	M8×1	31	19	27,5	6,5	14	**504-056**	**504-052**	34	*0.07*
504-105	TUBE FITTING LE 4/6 M10x1,0	4/6	M10×1	M8×1	M10×1	33	19	27,5	6,5	14	**506-006**	**504-052**	34	*0.07*
405-619-061	TUBE FITTING LE 4/6 G1/8A	4/6	G 1/8 A	M8×1	M10×1	33	19	27,5	6,3	14	**402-606-191**	**504-052**	33	*0.07*
506-114	TUBE FITTING LE 6 M10x1,0	6	M10×1	M10×1	M10×1	33	21	28,5	6,3	14	**506-006**	**506-033**	35	*0.08*
506-342	TUBE FITTING LE 6 M12x1,0	6	M12×1	M10×1	M10×1	38	25	35,2	7,5	17	**558-612**	**506-030**	62	*0.14*
506-101	TUBE FITTING LE 6 M14x1,5	6	M14×1,5	M10×1	M10×1	40	25	35,2	7,5	17	**508-303**	**506-005**	70	*0.15*
586-342	TUBE FITTING LE 6/8 M12x1,0	6/8	M12×1	M10×1	M14×1,5	44	25	35,2	7,5	17	**558-812**	**506-030**	64	*0.14*
506-013	TUBE FITTING LE 6/8 M14x1,5	6/8	M14×1,5	M10×1	M14×1,5	43	25	35,2	7,5	17	**508-008**	**506-005**	61	*0.13*
506-345	TUBE FITTING LE 6/10 M12x1,0	6/10	M12×1	M10×1	M16×1,5	48,5	25	35	7,7	19	**558-912**	**506-030**	77	*0.17*
506-346	TUBE FITTING LE 6/10 M16x1,5	6/10	M16×1,5	M10×1	M16×1,5	50	30	41	8,7	19	**510-010**	**506-034**	100	*0.22*
508-342	TUBE FITTING LE 8 M12x1,0	8	M12×1	M14×1,5	M14×1,5	44	27	37	7,5	17	**558-812**	**508-030**	67	*0.15*
508-012	TUBE FITTING LE 8 M14x1,5	8	M14×1,5	M14×1,5	M14×1,5	43	27	37	7,5	17	**508-008**	**508-007**	63	*0.14*
508-034	TUBE FITTING LE 8 G1/4A	8	G 1/4 A	M14×1,5	M14×1,5	44	27	37	7,5	17	**508-033**	**508-007**	65	*0.14*
568-342	TUBE FITTING LE 8/6 M12x1,0	8/6	M12×1	M14×1,5	M10×1	38	27	37	7,5	17	**558-612**	**508-030**	65	*0.14*
508-304	TUBE FITTING LE 8/6 M14x1,5	8/6	M14×1,5	M14×1,5	M10×1	40	27	37	7,5	17	**508-303**	**508-007**	66	*0.15*
508-345	TUBE FITTING LE 8/10 M12x1,0	8/10	M12×1	M14×1,5	M16×1,5	48,5	27	37	7,7	19	**558-912**	**508-030**	80	*0.18*
508-346	TUBE FITTING LE 8/10 M16x1,5	8/10	M16×1,5	M14×1,5	M16×1,5	50	30	41	8,7	19	**510-010**	**508-054**	93	*0.21*
510-342	TUBE FITTING LE 10 M12x1,0	10	M12×1	M16×1,5	M16×1,5	48,5	30	40	7,5	19	**558-912**	**510-041**	81	*0.18*
510-344	TUBE FITTING LE 10 M16x1,5	10	M16×1,5	M16×1,5	M16×1,5	50	30	41	8,7	19	**510-010**	**510-044**	89	*0.20*
510-343	TUBE FITTING LE 10 G1/4A	10	G 1/4 A	M16×1,5	M16×1,5	48,5	30	40	7,5	19	**558-913**	**510-023**	78	*0.17*
510-346	TUBE FITTING LE 10/6 M16x1,5	10/6	M16×1,5	M16×1,5	M10×1	50	30	41	8,7	19	**506-018**	**510-044**	96	*0.21*
510-341	TUBE FITTING LE 10/8 M12x1,0	10/8	M12×1	M16×1,5	M14×1,5	44	30	40	7,5	17	**558-812**	**510-041**	69	*0.15*

Solderless pipe union with tapered sleeve

Banjo fittings acc. to DIN 71430 Form C

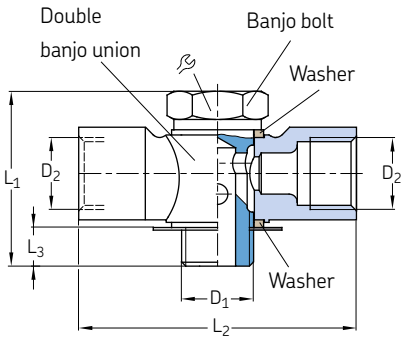

Order number	Designation	Tube ∅	D_1	D_2	L_1	L_2	L_3		Banjo bolt	Material	Double banjo union	Material	Weight (total)	
		mm	mm	mm	mm	mm	mm	mm					g	*lb*
504-109	TUBE FITTING TH4 M 8x1,0	4	M8×1	M8×1	26	38	6,5	11	**504-073**	Steel, galv.	**504-071**	Die-cast zinc	31	*0.07*
504-112	TUBE FITTING TH4 M10x1,0	4	M10×1	M8×1	26	38	6,5	14	**504-054**	Steel, galv.	**504-051**	Die-cast zinc	35	*0.08*
506-242	TUBE FITTING TH6 M12x1,0	6	M12×1	M10×1	34	48	7,5	17	**558-012**	Steel, galv.	**506-032**	Die-cast zinc	71	*0.16*
506-025	TUBE FITTING TH6 M14x1,5	6	M14×1,5	M10×1	34	48	7,5	17	**508-006**	Steel, galv.	**506-007**	Die-cast zinc	70	*0.15*
508-242	TUBE FITTING TH8 M12x1,0	8	M12×1	M14×1,5	34	54	7,5	17	**558-012**	Steel, galv.	**508-032**	Die-cast zinc	77	*0.17*
508-013	TUBE FITTING TH8 M14x1,5	8	M14×1,5	M14×1,5	34	54	7,5	17	**508-006**	Steel, galv.	**508-005**	Die-cast zinc	77	*0.17*
508-025	TUBE FITTING TH8 G1/4A	8	G 1/4 A	M14×1,5	35	54	7,5	17	**508-023**	Steel, galv.	**508-005**	Die-cast zinc	77	*0.17*
510-242	TUBE FITTING TH10 M12x1,0	10	M12×1	M16×1.5	34	60	7.5	17	**558-012**	Steel, galv.	**510-042**	Die-cast zinc	83	*0.18*

Banjo fittings acc. to DIN 71430 Form D

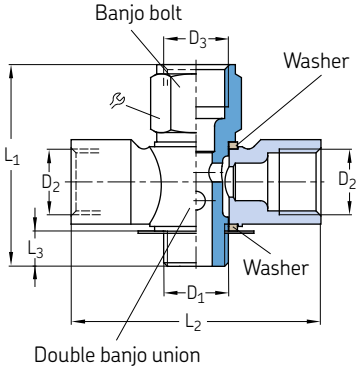

Order number	Designation	Tube ∅	D_1	D_2	D_3	L_1	L_2	L_3		Banjo bolt	Double banjo union	Weight (total)	
		mm	mm	mm	mm	mm	mm	mm	mm			g	*lb*
Steel, galvanized bolt and die-cast zinc union													
504-110	TUBE FITTING TH4 M 8x1,0	4	M8×1	M8×1	M8×1	31	38	6,5	11	**504-071**	**504-071**	32	*0.07*
504-111	TUBE FITTING TH4 M10x1,0	4	M10×1	M8×1	M8×1	31	38	6,5	14	**504-056**	**504-051**	37	*0.08*
504-106	TUBE FITTING TH4/6 M10x1,0	4 /6	M10×1	M8×1	M10×1	33	38	6,5	14	**506-006**	**504-051**	37	*0.08*
506-442	TUBE FITTING TH6 M12x1,0	6	M12×1	M10×1	M10×1	38	48	7,5	17	**558-612**	**506-032**	70	*0.15*
506-014	TUBE FITTFING TH6 M14x1,5	6	M14×1,5	M10×1	M10×1	40	48	7,5	17	**508-303**	**506-007**	73	*0.16*
586-442	TUBE FITTING TH6/8 M12x1,0	6 /8	M12×1	M10×1	M14×1,5	44	48	7,5	17	**558-812**	**506-032**	72	*0.16*
506-026	TUBE FITTING TH6/8 M14x1,5	6 /8	M14×1,5	M10×1	M14×1,5	43	48	7,5	17	**508-008**	**506-007**	70	*0.15*
508-442	TUBE FITTING TH8 M12x1,0	8	M12×1	M14×1,5	M14×1,5	44	54	7,5	17	**558-812**	**508-032**	68	*0.15*
508-014	TUBE FITTING TH8 M14x1,5	8	M14×1,5	M14×1,5	M14×1,5	43	54	7,5	17	**508-008**	**508-005**	79	*0.17*
568-442	TUBE FITTING TH8/6 M12x1,0	8 /6	M12×1	M14×1,5	M10×1	38	54	7,5	17	**558-612**	**508-032**	80	*0.18*
508-305	TUBE FITTING TH8/6 M14x1,5	8 /6	M14×1,5	M14×1,5	M10×1	40	54	7,5	17	**508-303**	**508-005**	90	*0.20*

Solderless pipe union with tapered sleeve

Banjo fittings, rotatable

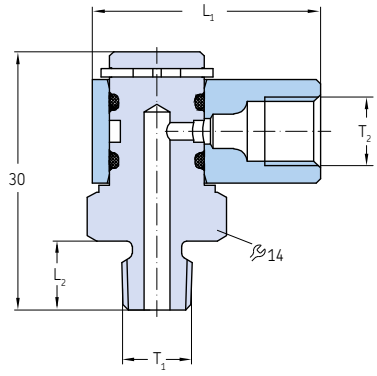

Order number	Designation	Tube ∅D	Thread T_1	Thread T_2	L_1	L_2	Speed max.	Oil pressure max.		Air pressure max.		Material	Weight	
		mm	mm	mm	mm	mm	min^{-1}	bar	*psi*	bar	*psi*		g	*lb*
405-549-049	BANJO FITTING MOVABLE M 8x1A x M8I	4	M8×1 tap.	M8x1	26,5	8	1	45	*650*	–	–	Brass	41	*0.09*
405-551-049	BANJO FITTING MOVABLE M10x1A x M8I	4	M10×1tap.	M8x1	26,5	8	1	45	*650*	–	–	Brass	40	*0.09*
2230-00000155	BANJO FITTING MOVABLE M10x1KAxM10x1I6		M10×1tap.	M10x1	29	6,5	1	45	*650*	–	–	Brass	42	*0.09*

Banjo fitting with indicator pin for lubricant distributor

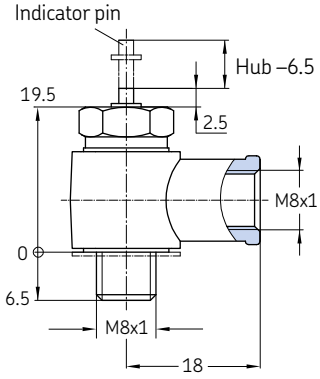

Order number	Designation	Tube ∅	Material	Weight	
		mm		g	*lb*
169-200-008	TUBE FITTING SWVE 4 M 8x1,0+K	4	Steel, galvanized	24	*0.05*

Solderless pipe union with tapered sleeve

Rotating joints

401-504-192

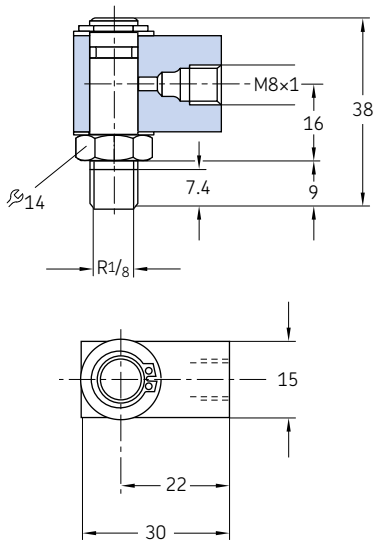

401-504-292

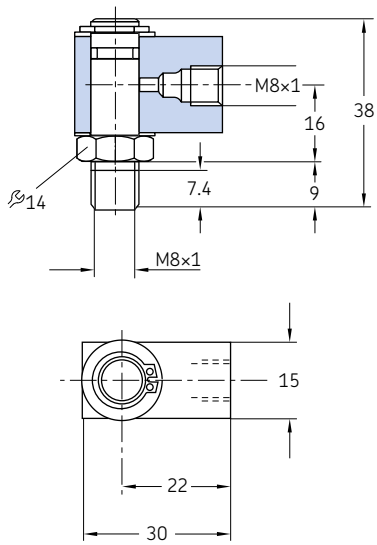

401-506-313

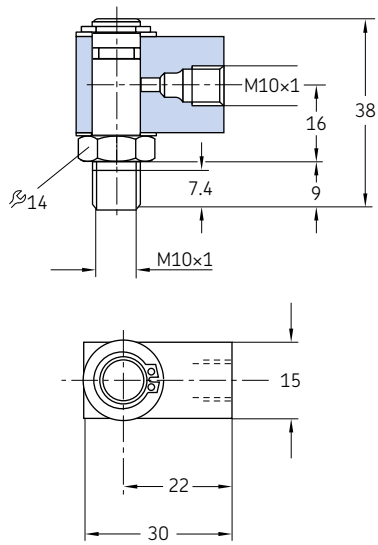

Order number	Designation	Tube ∅D	Thread$_1$	Thread$_2$	Speed max.	Oil pressure max.		Air pressure max.		Material	Weight	
		mm		mm	min^{-1}	bar	*psi*	bar	*psi*		g	*lb*
401-504-192	ROTATING JOINT MS 4 R1/8	4	R 1/8	M8×1	100	30	*435*	8	*116*	Brass	81	*0.18*
401-504-292	ROTATING JOINT MS 4 M 8x1	4	M8×1	M8×1	100	30	*435*	8	*116*	Brass	80	*0.18*
401-506-313	ROTATING JOINT MS 6 M10x1	6	M10×1	M10×1	100	30	*435*	8	*116*	Brass	77	*0.17*

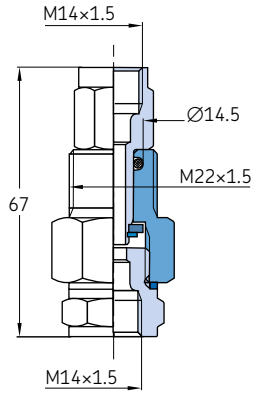

Order number	Designation	Tube ∅D	Thread$_1$	Thread$_2$	Speed max.	Oil pressure max.		Air pressure max.		Material	Weight	
		mm	mm	mm	min^{-1}	bar	*psi*	bar	*psi*		g	*lb*
408-120	ROTATING JOINT ST 8 M14x1,5	8	M14x1,5	M14x1,5	20	10	*145*	–	–	Steel	200	*0.44*

Solderless pipe union with tapered sleeve

Cross joints

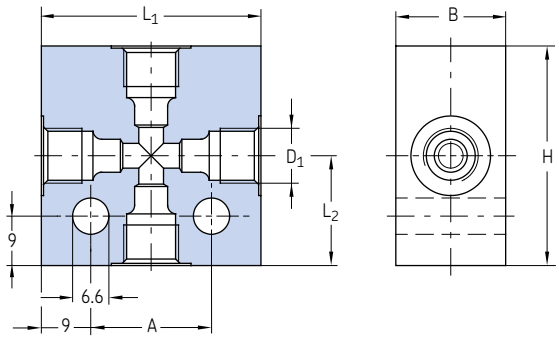

Order number	Designation	Tube ∅	D_1	A	B	H	L_1	L_2	Material	Weight	
		mm	mm	mm	mm	mm	mm	mm		g	*lb*
DAK504-S1	CROSS PIECE,AL 1x M10x1/3x M 8x1	4/6	M10×1/ M8×1	22	20	40	40	20	Aluminum	78	*0.17*
DAK506	CROSS PIECE,AL 4x M10x1	6	M10×1	22	20	40	40	20	Aluminum	75	*0.17*
DAK508	CROSS PIECE,AL 4x M14x1,5	8	M14×1,5	32	20	50	50	25	Aluminum	110	*0.24*
DAK510	CROSS PIECE,AL 4x M16x1,5	10	M16×1,5	25	20	56	50	28	Aluminum	115	*0.25*
DAK512	CROSS PIECE,AL 4x M18x1,5	12	M18×1,5	42	25	60	60	30	Aluminum	194	*0.43*

Solderless pipe union with tapered sleeve

Cross joints

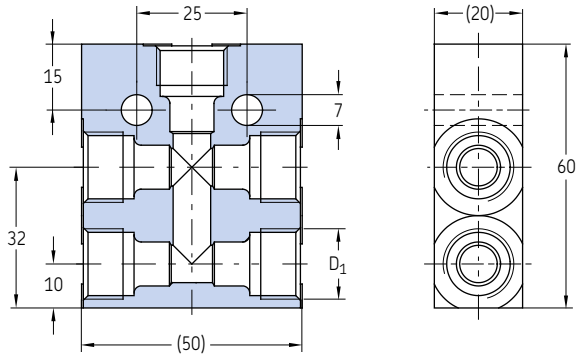

Order number	Designation	Tube ∅	D_1	Material	Weight	
		mm	mm		g	*lb*
DAK510-S1	TEE,ST 5x M16x1,5 ZN	10	M16×1,5	Steel, galvanized	322	*0.71*

High-pressure cutting sleeve unions acc. to ISO 8334-1

DECS union

SSCS union

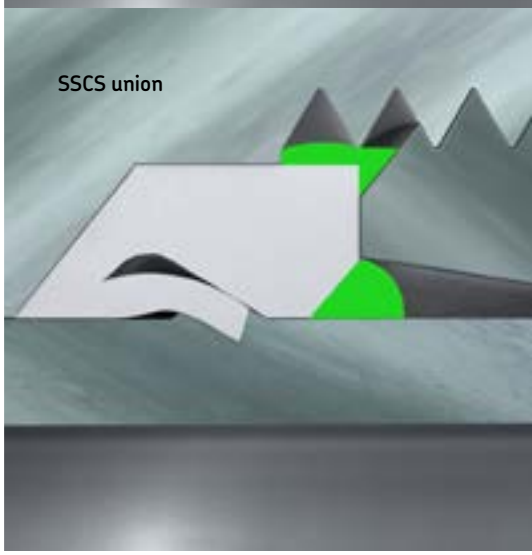

Description

Solderless pipe fittings with cutting sleeves are designed for high-pressure oil, fluid grease and grease lubrication systems with pressures up to 400 bar and more with an operating temperature range from -25 to 80 °C . Depending on the operating pressure, the fittings are available in 3 pressure series: LL (very light), L (light) and S (heavy). The pipe connections, threads and pressure series are defined in DIN EN ISO 8434-1 (formerly DIN 2353).

In consideration of the application, the fittings are available in various materials (galvanized steel, stainless steel and brass).

Cutting sleeve fittings, also called bite-type fittings, are very popular due to simple assembly that requires only two wrenches. It is recognised for its high-pressure performance from a compact body. During assembly, the cutting ring forms, cutting edges into the tube that will remain after reassembly. The cutting ring can also be preassembled by a manual device or with the help of a tool.

Series

	LL	L		S	
Design	very light	light		rigid	
Tube diameter (mm)	4, 6, 8, 10, 12	6, 8 ,10, 12, 15	22, 26	6, 8, 10, 12	16, 20, 30
Nominal pressure	100 bar *1 450 psi*	315 bar *4 568 psi*	160 bar *2 320 psi*	630 bar *9 137 psi*	400 bar *5 800 psi*
Operation pressure max.	200 bar *2 900 psi*	500 bar *7 250 psi*	250 bar *3 625 psi*	900 bar *13 053 psi*	420 bar *6 090 psi*
Space requirement	very small	small		large	
Lubrication systems	medium-pressure lubrication systems			high-pressure grease systems	
Typical applications	vehicles, machine tools, wind mills			presses, injection molding machines, heavy industry	

Types of cutting sleeve unions

- Double-edged cutting sleeve union (DECS)
- Soft-seal cutting sleeve union (SSCS)

High-pressure cutting sleeve unions

Overview of fitting types

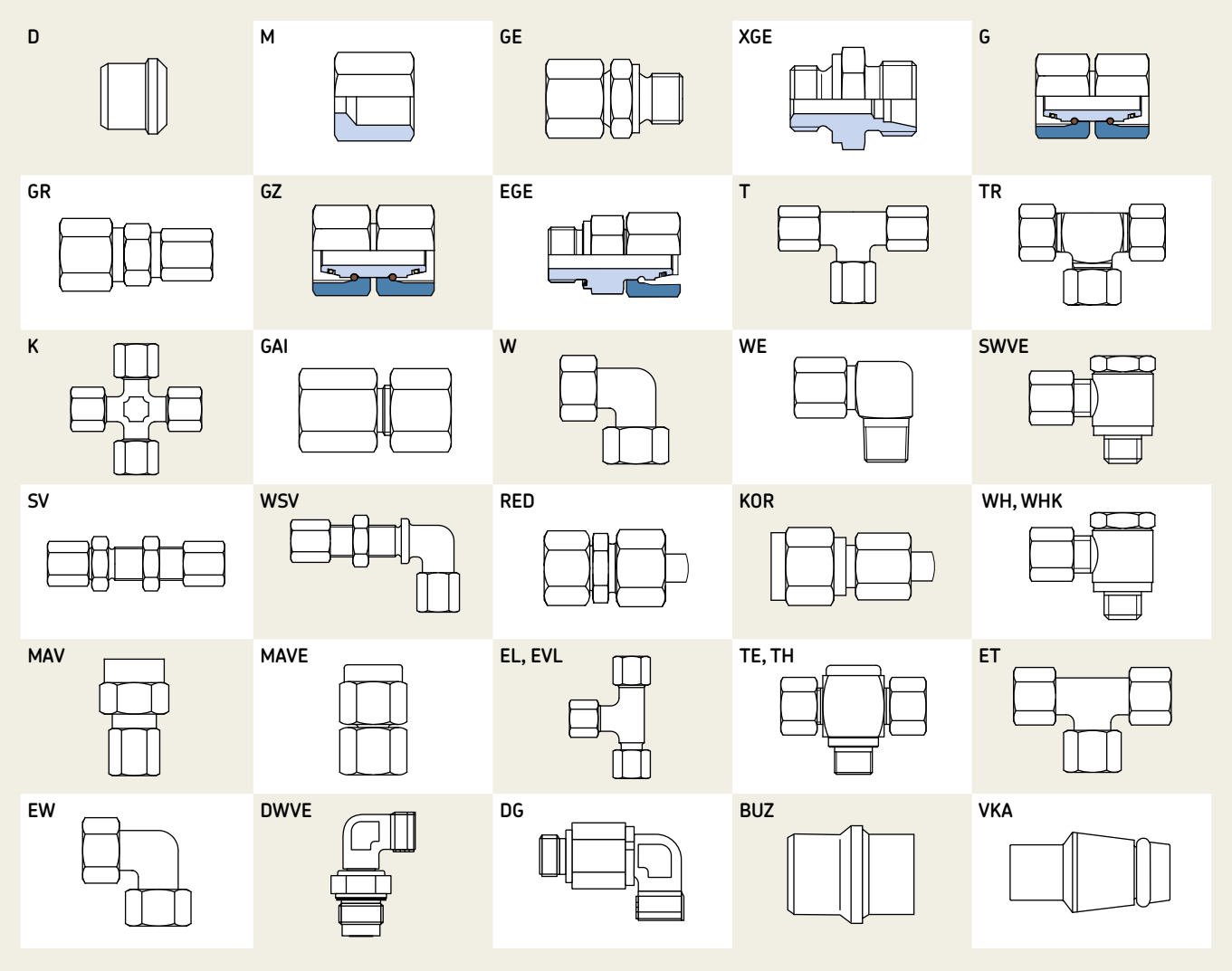

Nomenclature of fitting designations

D		4					
M	ST	6		-LL	G1/8		
GE	VA	8		-L	R1/8		
...	MS	10	Z	-S	M8x1K	ED	CF

- Fitting type
- Material
- Tube diameter in mm
- Soft seal (fitting seal)
- Series
- Thread type
- Soft seal (tube seal)
- Surface coating

Legend of fitting type abbreviations

D	Cutting sleeve
M	Union nuts
GE	Straight screw-in connector
XGE	Straight screw-in gland
G	Straight tube-to-tube connector
GR	Straight tube-to-tube reducing connector
GZ	Union stud
EGE	Straight tube stud
T	T-connector
TR	T-reducing connector
K	K-connector
GAI	Female connector straight
W	Elbow connector
WE	Elbow screw-in connector
SWVE	Banjo fitting
SV	Straight bulkhead connector
WSV	Elbow bulkhead connector
RED	Reducing connectors O-ring sealed
KOR	Reducing connectors
WH	Banjo fitting (high-pressure)
WHK	Banjo fitting consolidated
MAV	Connectors for pressure gauge
MAVE	Connectors for pressure gauge (adjustable)
EL	L-connectors adjustable
EVL	Standpipe branch tee
TE	Screw-in T-connector
TH	Screw-in T-connector (high-pressure)
ET	Swivel nut branch tee
EW	Swivel nut elbow
DWVE	Elbow male stud plain bearing rotary union
DG	Elbow bulkhead ball bearing rotary union
BUZ	Blanking plug for cones
VKA	Blanking plug for cones
X	Prefix X means fitting without cutting sleeve and without union nut (example: GE and XGE)

Double-edged cutting sleeve union (DECS)

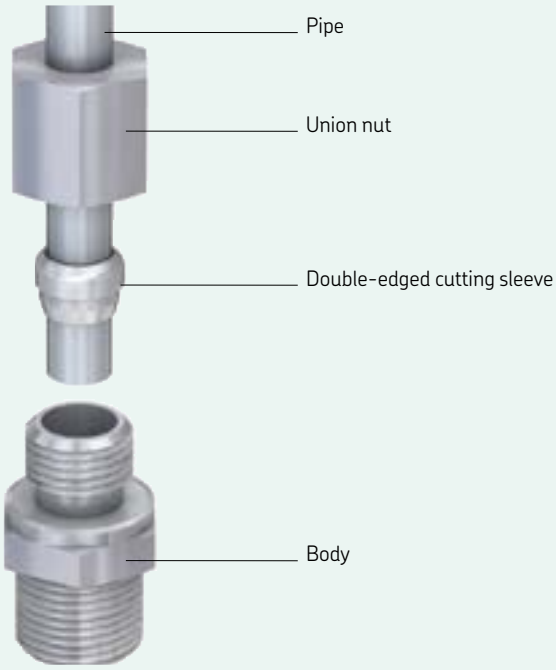

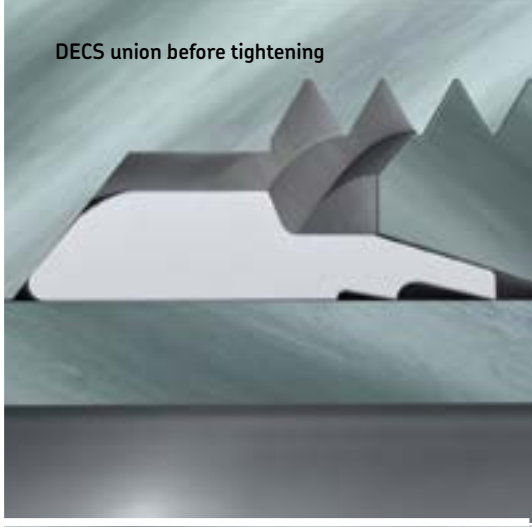

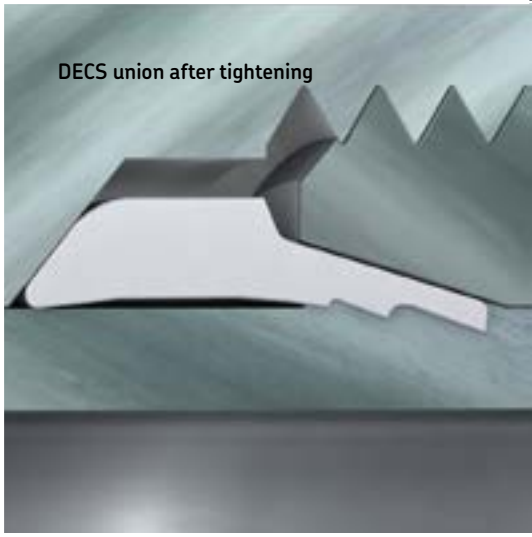

Description

Double-edged cutting sleeve unions (DECS) consist of a union nut, a double-edged cutting sleeve and a body. To mount the union, the union nut and double-edged cutting sleeve must be placed on the pipe end. Both parts must be aligned as shown on the illustration above. Then the pipe can be pushed into the body before tightening the union nut. During this process, the double-edged cutting sleeve cuts into the pipe to seal the connection as shown in the illustration above.

The following must be considered when tightening the union:

- Manual presetting – tighten the nut by 1 1/4 turns
- Final assembly – 1/4 turn after perceptible rise in force

Features and benefits

- Compact installation dimensions
- Virtually leakage-free, high-pressure union
- Recommended for high-pressure grease applications
- Suitable for thin and heavy pipes made from steel, stainless steel, copper and aluminum
- Common fitting system for high-pressure systems, especially for oil and grease lubrication
- Over-assembly protection through noticeable increase in force when tightening union nut
- Pipe vibration dampening resulting from pipe fixation during assembly (caused by DECS union)
- Wide operating temperature range from -25 to 80 °C

Double-edged cutting sleeves D acc. to DIN 3861/ISO 8434-1

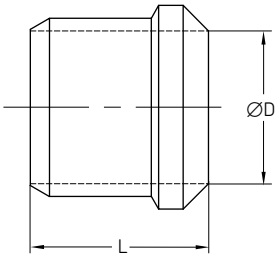

Order number	Designation		Series	Tube ØD	L	Material	Operating pressure max.		Weight	
				mm	mm		bar	*psi*	g	*lb*
Steel, galvanized										
223-14083-3	FERRULE	ST D 4-LL	LL	4	6	Steel, galvanized	100	*1 450*	0,3	*0.0006*
223-12295-2	FERRULE	ST D 6-LL	LL	6	7	Steel, galvanized	100	*1 450*	0,8	*0.0017*
223-12295-5	FERRULE	ST D 8-LL	LL	8	7	Steel, galvanized	100	*1 450*	1	*0.0022*
223-12295-9	FERRULE	ST D 10-LL	LL	10	7	Steel, galvanized	100	*1 450*	1,3	*0.0028*
223-12295-3	FERRULE	ST D 6-L/S	L/S	6	9,5	Steel, galvanized	250	*3 625*	1	*0.0022*
223-12295-6	FERRULE	ST D 8-L/S	L/S	8	10	Steel, galvanized	250	*3 625*	1,7	*0.0037*
223-12295-8	FERRULE	ST D 10-L/S	L/S	10	10	Steel, galvanized	250	*3 625*	3,1	*0.0068*
223-12296-1	FERRULE	ST D 12-L/S	L/S	12	10,5	Steel, galvanized	250	*3 625*	3,5	*0.0077*
223-12296-9	FERRULE	ST D 15-L	L	15	10	Steel, galvanized	250	*3 625*	4,5	*0.0099*
223-12583-1	FERRULE	ST D 18-L	L	18	10,5	Steel, galvanized	160	*2 320*	5,5	*0.0121*
223-12296-8	FERRULE	ST D 16-S	S	16	10	Steel, galvanized	400	*5 800*	5,6	*0.0123*
223-12296-3	FERRULE	ST D 20-S	S	20	13	Steel, galvanized	400	*5 800*	11,4	*0.0251*
223-12296-5	FERRULE	ST D 30-S	S	30	13	Steel, galvanized	250	*3 625*	19,3	*0.0425*
Stainless steel										
223-13639-5	FERRULE	VA D 4-LL	LL	4	6	Stainless steel 1.4571	100	*1 450*	0,3	*0.0006*
223-13639-2	FERRULE	VA D 6-LL	LL	6	7	Stainless steel 1.4571	100	*1 450*	0,8	*0.0017*
223-13639-3	FERRULE	VA D 6-L/S	L/S	6	9,5	Stainless steel 1.4571	250	*3 625*	1	*0.0022*
223-13639-1	FERRULE	VA D 8-L/S	L/S	8	9,5	Stainless steel 1.4571	250	*3 625*	1,7	*0.0037*
223-13639-4	FERRULE	VA D 10-L/S	L/S	10	9,5	Stainless steel 1.4571	250	*3 625*	3,1	*0.0068*
223-13639-9	FERRULE	VA D 12-L/S	L/S	12	10	Stainless steel 1.4571	250	*3 625*	3,5	*0.0077*
223-13639-7	FERRULE	VA D 16-S	S	16	9,5	Stainless steel 1.4571	400	*5 800*	5,6	*0.0123*
223-13639-8	FERRULE	VA D 20-S	S	20	12,5	Stainless steel 1.4571	400	*5 800*	11,4	*0.0251*
223-14092-5	FERRULE	VA D 30-S	S	30	12,5	Stainless steel 1.4571	250	*3 625*	19,3	*0.0425*
Zinc-nickel										
406-351	FERRULE	ST D 6-LL Z3W	LL	6	7	Zinc-nickel	100	*1 450*	1	*0.0022*
408-351	FERRULE	ST D 8-LL Z3W	LL	8	7	Zinc-nickel	100	*1 450*	1	*0.0022*
406-361	FERRULE	ST D 6-L Z3W	L	6	11,5	Zinc-nickel	250	*3 625*	2	*0.0044*
408-361	FERRULE	ST D 8-L Z3W	L	8	11,5	zinc-nickel	250	*3 625*	2	*0.0044*

Double-edged cutting sleeve unions

Union nuts M acc. to DIN 3861/ISO 8434-1

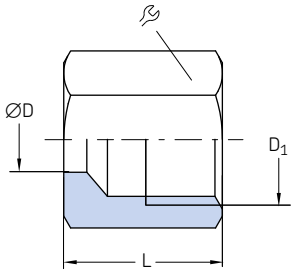

Order number	Designation	Series	Tube ØD	D_1	L		Material	Operating pressure max.		Weight	
			mm	mm	mm	mm		bar	*psi*	g	*lb*
Steel, galvanized											
223-13032-1	COUPLING NUT ST M 4-LL CF	LL	4	M8×1	11	10	Steel, galvanized	100	*1 450*	4	*0.01*
223-12374-9	COUPLING NUT ST M 6-LL CF	LL	6	M10×1	12	12	Steel, galvanized	100	*1 450*	6	*0.01*
223-13032-3	COUPLING NUT ST M 8-LL CF	LL	8	M12×1	12	14	Steel, galvanized	100	*1 450*	7	*0.02*
223-12374-6	COUPLING NUT ST M 10-LL CF	LL	10	M14×1	12,5	17	Steel, galvanized	100	*1 450*	11	*0.02*
223-12373-9	COUPLING NUT ST M 6-L CF	L	6	M12×1,5	14,5	14	Steel, galvanized	250	*3 625*	10	*0.02*
223-13032-4	COUPLING NUT ST M 8-L CF	L	8	M14×1,5	14,5	17	Steel, galvanized	250	*3 625*	15	*0.03*
223-13032-6	COUPLING NUT ST M 10-L CF	L	10	M16×1,5	16	19	Steel, galvanized	250	*3 625*	18	*0.04*
223-12373-2	COUPLING NUT ST M 12-L CF	L	12	M18×1,5	16	22	Steel, galvanized	250	*3 625*	25	*0.06*
223-12374-8	COUPLING NUT ST M 15-L CF	L	15	M22×1,5	18	27	Steel, galvanized	250	*3 625*	42	*0.09*
223-12374-7	COUPLING NUT ST M 18-L CF	L	18	M26×1,5	18	32	Steel, galvanized	250	*3 625*	62	*0.14*
223-13032-9	COUPLING NUT ST M 16-S CF	S	16	M24×1,5	20,5	30	Steel, galvanized	400	*5 800*	66	*0.15*
223-12373-6	COUPLING NUT ST M 20-S CF	S	20	M30×2	24	36	Steel, galvanized	400	*5 800*	102	*0.22*
223-12374-2	COUPLING NUT ST M 30-S CF	S	30	M42×2	29	50	Steel, galvanized	400	*5 800*	219	*0.48*
Zinc-nickel											
406-352	COUPLING NUT ST M 6-LL Z3W	LL	6	M10×1	11,5	12	Zinc-nickel	100	*1 450*	5	*0.01*
408-352	COUPLING NUT ST M 8-LL Z3W	LL	8	M12×1	12	14	Zinc-nickel	100	*1 450*	5	*0.01*
406-362	COUPLING NUT ST M 6-L Z3W	L	6	M12×1,5	14,5	14	Zinc-nickel	250	*3 625*	30	*0.07*
408-362	COUPLING NUT ST M 8-L Z3W	L	8	M14×1,5	14,5	17	Zinc-nickel	250	*3 625*	35	*0.08*
Stainless steel											
223-13638-6	COUPLING NUT VA M 4-LL	LL	4	M8×1	11	10	Stainless steel 1.4571	100	*1 450*	4	*0.01*
223-13638-2	COUPLING NUT VA M 6-LL	LL	6	M10×1	12	12	Stainless steel 1.4571	100	*1 450*	6	*0.01*
223-14082-5	COUPLING NUT VA M 6-L	L	6	M12×1,5	14,5	14	Stainless steel 1.4571	250	*3 625*	10	*0.02*
223-13638-1	COUPLING NUT VA M 8-L	L	8	M14×1,5	14,5	17	Stainless steel 1.4571	250	*3 625*	15	*0.03*
223-13638-3	COUPLING NUT VA M 10-L	L	10	M16×1,5	16	19	Stainless steel 1.4571	250	*3 625*	18	*0.04*
223-14082-3	COUPLING NUT VA M 12-L	L	12	M18×1,5	16	22	Stainless steel 1.4571	250	*3 625*	25	*0.06*
223-13638-7	COUPLING NUT VA M 16-S	S	16	M24×1,5	20,5	30	Stainless steel 1.4571	400	*5 800*	66	*0.15*
223-13638-9	COUPLING NUT VA M 20-S	S	20	M30×2	24	36	Stainless steel 1.4571	400	*5 800*	102	*0.22*
223-14082-6	COUPLING NUT VA M 30-S	S	30	M42×2	29	50	Stainless steel 1.4571	400	*5 800*	219	*0.48*

Double-edged cutting sleeve unions

Straight screw-in connectors GE with metrical thread

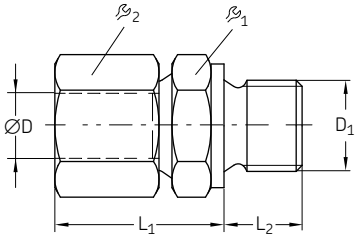

Order number	Designation	Series	Tube ØD	D_1	L_1	L_2			Material	Operating pressure max.		Weight	
			mm	mm	mm	mm	mm	mm		bar	*psi*	g	*lb*
Cylindrical thread													
223-12571-2	TB.FITT.ST GE 6-L M10x1,0 CF	L	6	M10×1	23	8	14	14	Steel, galvanized	315	*4 570*	40	*0.09*
223-12361-6	TB.FITT.ST GE 8-L M12x1,5 CF	L	8	M12×1,5	25	12	17	17	Steel, galvanized	315	*4 570*	40	*0.09*
223-10263-8	TB.FITT.ST GE10-L M10x1,0 CF	L	10	M10×1	23	8	14	14	Steel, galvanized	315	*4 570*	40	*0.09*
223-14129-4	TB.FITT.ST GE10-L M14x1,5 CF	L	10	M14×1,5	26	12	19	19	Steel, galvanized	315	*4 570*	50	*0.11*
223-10313-2	TB.FITT.ST GE10-L M18x1,5 CF	L	10	M18×1,5	27	12	24	19	Steel, galvanized	315	*4 570*	71	*0.16*
412-423	TB.FITT.ST GE12-L M14x1,5 CF	L	12	M14×1,5	26	12	19	22	Steel, galvanized	315	*4 570*	60	*0.13*
412-403	TB.FITT.ST GE12-L M16x1,5 CF	L	12	M16×1,5	27	12	22	22	Steel, galvanized	315	*4 570*	70	*0.15*
412-433	TB.FITT.ST GE12-L M18x1,5 CF	L	12	M18×1,5	27	12	24	22	Steel, galvanized	315	*4 570*	77	*0.17*
415-403	TB.FITT.ST GE15-L M18x1,5 CF	L	15	M18×1,5	29	12	24	27	Steel, galvanized	250	*3 626*	97	*0.21*
415-413	TB.FITT.ST GE15-L M22x1,5 CF	L	15	M22×1,5	30	14	27	27	Steel, galvanized	250	*3 626*	100	*0.22*
418-403	TB.FITT.ST GE18-L M22x1,5 CF	L	18	M22×1,5	31	14	27	32	Steel, galvanized	250	*3 626*	143	*0.32*
223-14214-8	TB.FITT.ST GE28-L M33x2,0 CF	L	28	M33×2	34	18	41	41	Steel, galvanized	160	*2 320*	280	*0.62*
96-0335-0058	TB.FITT.ST GE35-L M42x2,0 CF	L	35	M42×2	39	20	50	50	Steel, galvanized	160	*2 320*	450	*0.99*
96-0342-0058	TB.FITT.ST GE42-L M48x2,0 CF	L	42	M48×2	42	22	55	60	Steel, galvanized	160	*2 320*	600	*1.32*
96-1206-0058	TB.FITT.ST GE 6-S M12x1,5K CF	S	6	M12×1,5	28	12	17	17	Steel, galvanized	800	*11 600*	30	*0.07*
408-413	TB.FITT.ST GE 8-S M14×1,5 CF	S	8	M14×1,5	30	12	19	17	Steel, galvanized	800	*11 600*	66	*0.15*
410-413	TB.FITT.ST GE10-S M16×1,5 CF	S	10	M16×1,5	31	12	22	22	Steel, galvanized	800	*11 600*	87	*0.19*
412-453	TB.FITT.ST GE12-S M18×1,5 CF	S	12	M18×1,5	33	12	24	24	Steel, galvanized	630	*9 140*	111	*0.24*
96-1214-0058	TB.FITT.ST GE14-S M20x1,5K CF	S	14	M20×1,5	37	14	27	17	Steel, galvanized	630	*9 140*	140	*0.31*
Tapered thread													
223-12533-5	TB.FITT.ST GE 4-LL M6x1 K CF	LL	4	M6×1 tap.	26	8	9	10	Steel, galvanized	100	*1 450*	12	*0.03*
223-12271-8	TB.FITT.ST GE 4-LL M8x1 K CF	LL	4	M8×1 tap.	26	8	10	10	Steel, galvanized	100	*1 450*	15	*0.03*
223-13069-1	TB.FITT.ST GE 4-LL M10x1 K CF	LL	4	M10×1 tap.	26	8	10	10	Steel, galvanized	100	*1 450*	16	*0.04*
223-12533-9	TB.FITT.ST GE 6-LL M6x1 K CF	LL	6	M6×1 tap.	26	8	11	12	Steel, galvanized	100	*1 450*	19	*0.04*
223-13023-1	TB.FITT.ST GE 6-LL M8x1 K CF	LL	6	M8×1 tap.	26	8	11	12	Steel, galvanized	100	*1 450*	20	*0.04*
223-12271-7	TB.FITT.ST GE 6-LL M10x1 K CF	LL	6	M10×1 tap.	26	8	11	12	Steel, galvanized	100	*1 450*	21	*0.05*
223-13021-1	TB.FITT.ST GE 8-LL M10x1,0K CF	LL	8	M10×1 tap.	28	8	12	14	Steel, galvanized	100	*1 450*	24	*0.05*
410-443	TB.FITT.ST GE10-L M10x1,0K CF	L	10	M10×1 tap.	25	9	19	17	Steel, galvanized	500	*7 250*	56	*0.12*
223-13658-7	TB.FITT.VA GE 6-LL M 6x1 K	LL	6	M6×1 tap.	26	8	11	12	Stainless steel 1.4571	100	*1 450*	26	*0.06*
223-13658-6	TB.FITT.VA GE 6-LL M 8x1 K	LL	6	M8×1 tap.	26	8	11	12	Stainless steel 1.4571	100	*1 450*	27	*0.06*
223-13658-5	TB.FITT.VA GE 6-LL M 10x1 K	LL	6	M10×1 tap.	26	8	11	12	Stainless steel 1.4571	100	*1 450*	31	*0.07*
223-13715-1	TB.FITT.VA GE 8-LL M 10x1 K	LL	8	M10×1 tap.	28	8	12	14	Stainless steel 1.4571	100	*1 450*	33	*0.07*
223-14184-5	TB.FITT.VA GE 6-L M 10x1 K	L	6	M10×1 tap.	23	8	14	14	Stainless steel 1.4571	100	*1 450*	31	*0.07*
410-403-S3	TB.FITT.VA GE10-L M14x1,5K	L	10	M14×1,5 tap.	26	12	19	19	Stainless steel 1.4571	315	*4 570*	24	*0.05*

Double-edged cutting sleeve unions

Straight screw-in connectors GE with Whitworth pipe thread

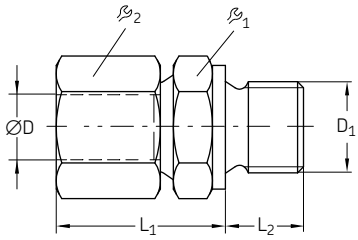

Order number	Designation	Series	Tube ØD	D_1	L_1	L_2	$\mathcal{S}_1$	$\mathcal{S}_2$	Material	Operating pressure max.		Weight	
			mm	in	mm	mm	mm	mm		bar	*psi*	g	*lb*
Cylindrical thread													
223-13016-3	FITTING ST GE 6-L G 1/8 A CF	L	6	G 1/8 A	23	8	14	14	Steel, galvanized	315	*4 570*	18	*0.04*
223-12477-8	FITTING ST GE 6-L G 1/4 A CF	L	6	G 1/4 A	25	12	19	14	Steel, galvanized	315	*4 570*	35	*0.08*
223-13766-6	FITTING ST GE 6-L G 3/8 A CF	L	6	G 3/8 A	26	12	22	14	Steel, galvanized	315	*4 570*	51	*0.11*
223-10814-2	FITTING ST GE 8-L G 1/8 A CF	L	8	G 1/8 A	23	8	14	17	Steel, galvanized	315	*4 570*	24	*0.05*
223-12477-6	FITTING ST GE 8-L G 1/4 A CF	L	8	G 1/4 A	25	12	19	17	Steel, galvanized	315	*4 570*	35	*0.08*
223-10080-3	FITTING ST GE 8-L G 3/8 A CF	L	8	G 3/8 A	26	12	22	17	Steel, galvanized	315	*4 570*	53	*0.12*
408-453W	FITTING ST GE 8-L G 1/2 A CF	L	8	G 1/2 A	27	14	27	17	Steel, galvanized	315	*4 570*	82	*0.18*
223-12272-9	FITTING ST GE 10-L G 1/4 A CF	L	10	G 1/4 A	26	12	19	19	Steel, galvanized	315	*4 570*	41	*0.09*
223-14214-4	FITTING ST GE 10-L G 3/8 A CF	L	10	G 3/8 A	27	12	22	19	Steel, galvanized	315	*4 570*	55	*0.12*
223-10313-7	FITTING ST GE 10-L G 1/2 A CF	L	10	G 1/2 A	28	14	27	19	Steel, galvanized	315	*4 570*	83	*0.18*
223-12477-9	FITTING ST GE 12-L G 1/4 A CF	L	12	G 1/4 A	27	12	19	22	Steel, galvanized	315	*4 570*	46	*0.10*
223-12360-8	FITTING ST GE 12-L G 3/8 A CF	L	12	G 3/8 A	27	12	22	22	Steel, galvanized	315	*4 570*	56	*0.12*
412-453W	FITTING ST GE 12-L G 1/2 A CF	L	12	G 1/2 A	28	14	27	22	Steel, galvanized	250	*3 625*	79	*0.17*
415-443W	FITTING ST GE 15-L G 3/4 A CF	L	15	G 3/4 A	30	16	32	27	Steel, galvanized	250	*3 625*	163	*0.36*
223-12361-9	FITTING ST GE 15-L G 1/2 A CF	L	15	G 1/2 A	29	14	27	27	Steel, galvanized	250	*3 625*	119	*0.26*
223-13621-8	FITTING ST GE 15-L G 3/8 A CF	L	15	G 3/8 A	29	12	24	27	Steel, galvanized	250	*3 625*	101	*0.22*
223-13766-1	FITTING ST GE 18-L G 1/2 A CF	L	18	G 1/2 A	31	14	27	32	Steel, galvanized	250	*3 625*	139	*0.31*
418-413W	FITTING ST GE 18-L G 3/4 A CF	L	18	G 3/4 A	30	16	32	32	Steel, galvanized	250	*3 625*	178	*0.39*
223-13749-3	FITTING ST GE 22-L G 1/2 A CF	L	22	G 1/2 A	33	14	32	36	Steel, galvanized	160	*2 320*	180	*0.40*
223-13016-2	FITTING ST GE 22-L G 3/4 A CF	L	22	G 3/4 A	33	16	32	36	Steel, galvanized	160	*2 320*	191	*0.42*
223-14214-9	FITTING ST GE 28-L G 3/4 A CF	L	28	G 3/4 A	34	16	41	41	Steel, galvanized	160	*2 320*	257	*0.57*
223-13610-9	FITTING ST GE 28-L G 1 A CF	L	28	G 1 A	34	18	41	41	Steel, galvanized	160	*2 320*	287	*0.63*
223-12477-1	FITTING ST GE 6-S G 1/4 A CF	S	6	G 1/4 A	28	12	19	17	Steel, galvanized	400	*5 800*	54	*0.12*
223-12477-2	FITTING ST GE 8-S G 1/4 A CF	S	8	G 1/4 A	30	12	19	19	Steel, galvanized	400	*5 800*	60	*0.13*
223-13016-6	FITTING ST GE 8-S G 3/8 A CF	S	8	G 3/8 A	30	12	22	19	Steel, galvanized	400	*5 800*	78	*0.17*
223-13016-9	FITTING ST GE 10-S G 1/4 A CF	S	10	G 1/4 A	31	12	19	22	Steel, galvanized	400	*5 800*	77	*0.17*
223-13016-4	FITTING ST GE 10-S G 3/8 A CF	S	10	G 3/8 A	31	12	22	22	Steel, galvanized	400	*5 800*	90	*0.20*
223-13016-7	FITTING ST GE 12-S G 3/8 A CF	S	12	G 3/8 A	33	12	22	24	Steel, galvanized	400	*5 800*	96	*0.21*
223-14129-3	FITTING ST GE 12-S G 1/2 A CF	S	12	G 1/2 A	24	14	27	24	Steel, galvanized	400	*5 800*	91	*0.20*
96-1114-0058	FITTING ST GE 14-S G 1/2 A CF	S	14	G 1/2 A	27	14	27	27	Steel, galvanized	400	*5 800*	153	*0.34*
223-13749-5	FITTING ST GE 16-S G 3/8 A CF	S	16	G 3/8 A	36	12	27	30	Steel, galvanized	400	*5 800*	165	*0.36*
223-13621-1	FITTING ST GE 16-S G 1/2 A CF	S	16	G 1/2 A	37	14	27	30	Steel, galvanized	400	*5 800*	164	*0.36*
223-12360-6	FITTING ST GE 20-S G 1/2 A CF	S	20	G 1/2 A	42	14	32	36	Steel, galvanized	400	*5 800*	214	*0.47*
223-12359-6	FITTING ST GE 20-S G 3/4 A CF	S	20	G 3/4 A	42	16	32	32	Steel, galvanized	400	*5 800*	224	*0.49*
Tapered thread													
223-12270-8	FITTING ST GE 4-LL R 1/8K CF	LL	4	R 1/8	26	8	11	10	Steel, galvanized	100 [1]	*1 450* [1]	12	*0.03*
223-12270-7	FITTING ST GE 6-LL R 1/8K CF	LL	6	R 1/8	26	8	11	12	Steel, galvanized	100 [1]	*1 450* [1]	15	*0.03*
223-12270-9	FITTING ST GE 8-LL R 1/8K CF	LL	8	R 1/8	28	8	12	14	Steel, galvanized	100 [1]	*1 450* [1]	18	*0.04*
223-13621-6	FITTING ST GE 8-LL R 1/4K CF	LL	8	R 1/4	32	12	14	14	Steel, galvanized	100 [1]	*1 450* [1]	26	*0.06*
96-5911-0058	FITTING ST GE10-LL R 1/4K CF	LL	10	R 1/4	32	12	14	17	Steel, galvanized	100 [1]	*1 450* [1]	36	*0.08*
96-5912-0058	FITTING ST GE12-LL R 1/8K CF	LL	12	R 1/8	32	12	17	19	Steel, galvanized	100 [1]	*1 450* [1]	65	*0.14*
96-5913-0058	FITTING ST GE12-LL R 3/8K CF	LL	12	R 3/8	32	12	17	19	Steel, galvanized	100 [1]	*1 450* [1]	55	*0.12*
410-443W	FITTING ST GE10-L R 1/8K CF	L	10	R 1/8	34	8	14	17	Steel, galvanized	315	*4 570*	42	*0.09*

[1] In grease lubrication systems fittings are permittted for operating pressures up to 350 bar, *5080 psi*

Double-edged cutting sleeve unions

Straight screw-in connectors GE with Whitworth pipe thread, made from stainless steel or brass

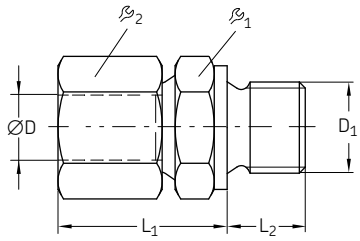

Order number	Designation	Series	Tube ØD	D_1	L_1	L_2			Material	Operating pressure max.		Weight	
			mm	in	mm	mm	mm	mm		bar	*psi*	g	*lb*
Stainless steel													
223-13614-9	TB.FITT.VA GE 6-LL R 1/8K	LL	6	R 1/8	26	8	11	10	Stainless steel 1.4571	100	*1 450*	65	*0.14*
223-13658-2	TB.FITT.VA GE 6-L G 1/8A	L	6	G 1/8A	23	8	14	14	Stainless steel 1.4571	315	*4 570*	23	*0.05*
223-13658-9	TB.FITT.VA GE 6-L G 1/4A	L	6	G 1/4A	25	12	19	14	Stainless steel 1.4571	315	*4 570*	40	*0.09*
223-13658-1	TB.FITT.VA GE 8-LL G 1/8A	LL	8	G 1/8A	24	8	14	17	Stainless steel 1.4571	315	*4 570*	33	*0.07*
223-14420-7	TB.FITT.VA GE10-L G 1/4A	L	10	G 1/4A	26	12	19	19	Stainless steel 1.4571	315	*4 570*	50	*0.11*
223-13715-9	TB.FITT.VA GE15-L G 1/2A	L	15	G 1/2A	29	14	27	27	Stainless steel 1.4571	250	*3 625*	119	*0.26*
223-13715-6	TB.FITT.VA GE15-L G 3/8A	L	15	G 3/8A	29	12	24	27	Stainless steel 1.4571	250	*3 625*	88	*0.19*
223-14420-8	TB.FITT.VA GE18-L G 1/2A	L	18	G 1/2A	31	14	27	32	Stainless steel 1.4571	250	*3 625*	139	*0.31*
99-0222-0058	TB.FITT.VA GE22-L G 3/4A	L	22	G 3/4A	33	16	32	36	Stainless steel 1.4571	160	*2 320*	191	*0.42*
223-14184-2	TB.FITT.VA GE28-L G 1A	L	28	G 1A	34	18	41	41	Stainless steel 1.4571	160	*2 320*	278	*0.61*
223-13614-7	TB.FITT.VA GE 6-S G 1/4A	S	6	G 1/4A	28	12	19	17	Stainless steel 1.4571	400	*5 800*	54	*0.12*
223-13614-6	TB.FITT.VA GE 8-S G 1/4A	S	8	G 1/4A	30	12	19	19	Stainless steel 1.4571	400	*5 800*	64	*0.14*
223-12452-9	TB.FITT.VA GE10-S G 1/4A	S	10	G 1/4A	31	12	19	22	Stainless steel 1.4571	400	*5 800*	77	*0.17*
223-12452-7	TB.FITT.VA GE16-S G 1/2A	S	16	G 1/2A	37	14	27	30	Stainless steel 1.4571	400	*5 800*	164	*0.36*
223-13658-4	TB.FITT.VA GE20-S G 1/2A	S	20	G 1/2A	42	14	32	36	Stainless steel 1.4571	400	*5 800*	214	*0.47*
223-12452-5	TB.FITT.VA GE20-S G 3/4A	S	20	G 3/4A	42	16	32	32	Stainless steel 1.4571	400	*5 800*	224	*0.49*
Brass													
223-12377-7	TB.FITT.MS GE 8-L G 1/4A	L	8	G 1/4A	25	12	19	17	Brass	200	*2 900*	26	*0.06*
223-12377-8	TB.FITT.MS GE15-L G 1/2A	L	15	G 1/2A	29	14	27	27	Brass	160	*2 320*	72	*0.16*

Straight screw-in connectors GE with NPT pipe thread

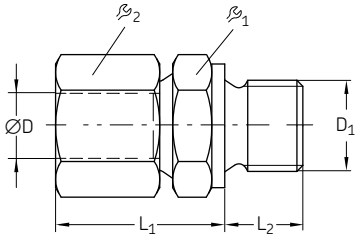

Order number	Designation	Series	Tube ØD	D_1	L_1	L_2			Material	Operating pressure max.		Weight	
			mm	in	mm	mm	mm	mm		bar	*psi*	g	*lb*
223-14214-2	FITTING ST GE 6-L 1/8NPT CF	L	6	1/8 NPT	32	10	11	12	Steel, galvanized	100	*1 450*	24	*0.05*
223-12273-5	FITTING ST GE 8-L 1/4NPT CF	L	8	1/4 NPT	38	14.5	17	17	Steel, galvanized	315	*4 570*	42	*0.09*
223-13096-2	FITTING ST GE 10-S 1/4NPT CF	S	10	1/4 NPT	44	14.5	19	22	Steel, galvanized	630	*9 140*	77	*0.17*
223-14214-5	FITTING ST GE 20-S 1/2NPT CF	S	20	1/2 NPT	59	19.5	32	36	Steel, galvanized	400	*5 800*	235	*0.52*

Double-edged cutting sleeve unions

Straight screw-in glands XGE

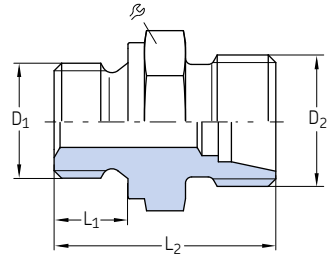

Order number	Designation	Series	Tube Ø	D_1	D_2	L_1	L_2		Material	Operating pressure max.		Weight	
			mm		mm	mm	mm	mm		bar	*psi*	g	*lb*
223-13766-9	TB.FITT.ST XGE 6-LL M 10x1,0K CF	LL	6	M10×1 tap.	M10×1	8	20	11	Steel, galv.	100	*1 450*	17	*0.04*
223-14129-1	TB.FITT.ST XGE 6-LL M 8x1,0K CF	LL	6	M8×1 tap.	M10×1	8	20	11	Steel, galv.	100	*1 450*	17	*0.04*
223-14129-2	TB.FITT.ST XGE 6-LL R 1/8K CF	LL	6	R 1/8	M12×1,5	8	20	11	Steel, galv.	100	*1 450*	18	*0.04*
223-14234-7	TB.FITT.ST XGE 6-L M 10x1,0 CF	L	6	M10×1	M12×1,5	8	23,5	14	Steel, galv.	500	*7 250*	20	*0.04*
408-313	TB.FITT.ST XGE 8-L M 14x1,5 CF	L	8	M14×1,5	M14×1,5	9	36	17	Steel, galv.	500	*7 250*	31	*0.07*
410-313	TB.FITT.ST XGE10-L M 16x1,5 CF	L	10	M16×1,5	M16×1,5	9	31,5	22	Steel, galv.	500	*7 250*	40	*0.09*
223-14304-2	TB.FITT.ST XGE 10-L M 14x1,5 CF	L	10	M14×1,5	M16×1,5	9	30,0	19	Steel, galv.	500	*7 250*	40	*0.09*
223-14304-7	TB.FITT.ST XGE 12-L M 14x1,5 CF	L	12	M14×1,5	M18×1,5	12	30,0	19	Steel, galv.	400	*5 800*	55	*0.12*
223-13610-8	TB.FITT.ST XGE 18-L M 22x1,5 CF	L	18	M22×1,5	M26×1,5	14	36,0	27	Steel, galv.	315	*4 570*	148	*0.33*
223-11229-9	TB.FITT.ST XGE 8-L G 1/4A CF	L	8	G 1/4A	M14×1,5	12	30	19	Steel, galv.	500	*7 250*	35	*0.08*
223-14234-4	TB.FITT.ST XGE10-L G 1/8A CF	L	10	G 1/8A	M16×1,5	12	34	17	Steel, galv.	500	*7 250*	33	*0.07*
223-10055-9	TB.FITT.ST XGE10-L G 3/8A CF	L	10	G 3/8A	M16×1,5	12	31,5	22	Steel, galv.	500	*7 250*	55	*0.12*
223-14418-7	TB.FITT.ST XGE18-L G 1/2A CF	L	18	G 1/2A	M26×1,5	14	36	27	Steel, galv.	400	*5 800*	139	*0.31*
223-11089-3	TB.FITT.ST XGE10-S G 1/4A CF	S	10	G 1/4A	M18×1,5	12	30	19	Steel, galv.	800	*11 600*	41	*0.09*
223-14304-5	TB.FITT.ST XGE20-S G 1/2A CF	S	20	G 1/2A	M30×2	14	45	32	Steel, galv.	420	*6 090*	262	*0.58*

Straight tube-to-tube connectors G

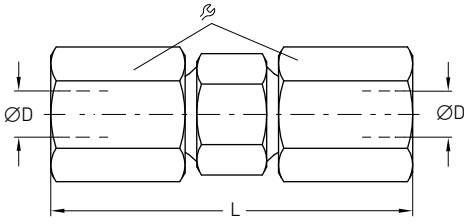

Order number	Designation	Series	Tube ØD	L		Material	Operating pressure max.		Weight	
			mm	mm	mm		bar	*psi*	g	*lb*
Steel, galvanized										
223-12531-8	TB.FITT.ST G 4-LL CF	LL	4	31	10	Steel, galvanized	100	*1 450*	13	*0.03*
223-12482-9	TB.FITT.ST G 6-LL CF	LL	6	32	12	Steel, galvanized	100	*1 450*	21	*0.05*
223-12531-9	TB.FITT.ST G 8-LL CF	LL	8	35	14	Steel, galvanized	100	*1 450*	26	*0.06*
223-12531-2	TB.FITT.ST G 10-L CF	L	10	42	19	Steel, galvanized	500	*7 250*	65	*0.14*
223-13732-8	TB.FITT.ST G 12-L CF	L	12	43	22	Steel, galvanized	500	*7 250*	84	*0.19*
223-12531-6	TB.FITT.ST G 15-L CF	L	15	46	27	Steel, galvanized	400	*5 800*	145	*0.32*
223-13732-4	TB.FITT.ST G 18-L CF	L	18	48	32	Steel, galvanized	400	*5 800*	205	*0.45*
223-13049-3	TB.FITT.ST G 10-S CF	S	10	49	22	Steel, galvanized	800	*11 600*	112	*0.25*
223-12531-4	TB.FITT.ST G 16-S CF	S	16	57	30	Steel, galvanized	630	*9 140*	234	*0.52*
223-12363-2	TB.FITT.ST G 20-S CF	S	20	66	36	Steel, galvanized	420	*6 090*	369	*0.81*
223-12363-6	TB.FITT.ST G 30-S CF	S	30	80	50	Steel, galvanized	420	*6 090*	806	*1.78*
Stainless steel										
223-13615-5	TB.FITT.VA G 6-L	L	6	39	14	Stainless steel 1.4571	315	*4 570*	36	*0.08*
223-13615-3	TB.FITT.VA G 8-L	L	8	40	17	Stainless steel 1.4571	315	*4 570*	50	*0.11*
223-13615-6	TB.FITT.VA G 10-L	L	10	42	19	Stainless steel 1.4571	315	*4 570*	37	*0.08*
223-12454-8	TB.FITT.VA G 15-L	L	15	46	27	Stainless steel 1.4571	315	*4 570*	145	*0.32*
223-12454-1	TB.FITT.VA G 10-S	S	10	49	22	Stainless steel 1.4571	630	*9 140*	112	*0.25*
223-12454-6	TB.FITT.VA G 16-S	S	16	57	30	Stainless steel 1.4571	400	*5 800*	234	*0.52*
223-12454-3	TB.FITT.VA G 20-S	S	20	66	36	Stainless steel 1.4571	400	*5 800*	369	*0.81*
223-12454-5	TB.FITT.VA G 30-S	S	30	80	50	Stainless steel 1.4571	400	*5 800*	806	*1.78*

Double-edged cutting sleeve unions

Straight tube-to-tube reducing connectors GR

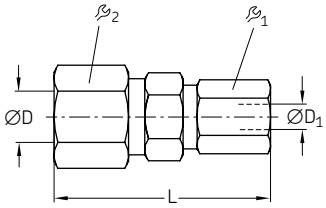

Order number	Designation	Series	Tube ØD	Tube ØD1	L	1	2	Material	Operating pressure max.		Weight	
			mm	mm	mm	mm	mm		bar	*psi*	g	*lb*
Steel, galvanized												
223-12542-2	TB.FITT.ST GR 6/ 4-LL CF	LL	6	4	32	10	12	Steel, galvanized	100	*1 450*	7	*0.02*
504-412	TB.FITT.ST GR 8/ 4-LL CF	LL	8	4	34	10	14	Steel, galvanized	100	*1 450*	9	*0.02*
223-13705-5	TB.FITT.ST GR 8/ 6-L CF	L	8	6	40	14	17	Steel, galvanized	500	*7 250*	16	*0.04*
223-13622-3	TB.FITT.ST GR 10/ 6-L CF	L	10	6	41	14	19	Steel, galvanized	500	*7 250*	21	*0.05*
223-13024-4	TB.FITT.ST GR 10/ 8-L CF	L	10	8	41	17	19	Steel, galvanized	500	*7 250*	21	*0.05*
223-10986-1	TB.FITT.ST GR 12/ 6-L CF	L	12	6	42	14	22	Steel, galvanized	400	*5 800*	26	*0.06*
223-13622-7	TB.FITT.ST GR 12/ 8-L CF	L	12	8	42	17	22	Steel, galvanized	400	*5 800*	26	*0.06*
510-410	TB.FITT.ST GR 12/10-L CF	L	12	10	43	19	22	Steel, galvanized	400	*5 800*	29	*0.06*
223-13024-8	TB.FITT.ST GR 15/ 8-L CF	L	15	8	45	17	27	Steel, galvanized	400	*5 800*	42	*0.09*
223-12542-7	TB.FITT.ST GR 15/10-L CF	L	15	10	45	19	27	Steel, galvanized	400	*5 800*	46	*0.10*
223-12542-8	TB.FITT.ST GR 15/12-L CF	L	15	12	45	22	27	Steel, galvanized	400	*5 800*	45	*0.10*
510-413	TB.FITT.ST GR 18/10-L CF	L	18	10	46	19	32	Steel, galvanized	400	*5 800*	65	*0.14*
512-412	TB.FITT.ST GR 18/12-L CF	L	18	12	46	22	32	Steel, galvanized	400	*5 800*	64	*0.14*
515-410	TB.FITT.ST GR 18/15-L CF	L	18	15	48	27	32	Steel, galvanized	400	*5 800*	65	*0.14*
223-13622-1	TB.FITT.ST GR 16/10-S CF	S	16	10	54	22	30	Steel, galvanized	630	*9 140*	80	*0.18*
223-12364-4	TB.FITT.ST GR 20/10-S CF	S	20	10	60	22	36	Steel, galvanized	420	*6 090*	129	*0.28*
223-13024-1	TB.FITT.ST GR 30/20-S CF	S	30	20	74	36	50	Steel, galvanized	420	*6 090*	299	*0.66*
Stainless steel												
223-13619-9	TB.FITT.VA GR 16/10 S	S	16	10	54	22	30	Stainless steel 1.4571	400	*5 800*	80	*0.18*
223-13619-2	TB.FITT.VA GR 20/10 S	S	20	10	60	22	36	Stainless steel 1.4571	400	*5 800*	129	*0.28*
223-13791-5	TB.FITT.VA GR 30/20 S	S	30	20	74	36	50	Stainless steel 1.4571	400	*5 800*	299	*0.66*

Double-edged cutting sleeve unions

Union studs GZ

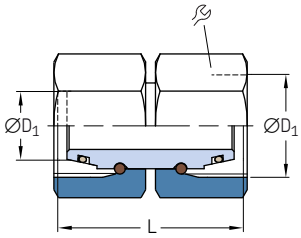

Order number	Designation	Series	Tube ØD	D_1	L		Material	Operating pressure max.		Weight	
			mm	mm	mm	mm		bar	*psi*	g	*lb*
Steel, galvanized											
223-10550-2	TB.STUD ST GZ 6-L CF	L	6	M14×1,5	33	14	Steel, galvanized	500	*7 250*	28	*0.06*
223-10550-8	TB.STUD ST GZ 8-L CF	L	8	M14×1,5	33	17	Steel, galvanized	500	*7 250*	41	*0.09*
223-14253-2	TB.STUD ST GZ10-L CF	L	10	M16×1,5	34	19	Steel, galvanized	500	*7 250*	53	*0.12*
223-10550-6	TB.STUD ST GZ12-L CF	L	12	M18×1,5	34	22	Steel, galvanized	400	*5 800*	71	*0.16*
223-14253-5	TB.STUD ST GZ15-L CF	L	15	M22×1,5	39	27	Steel, galvanized	400	*5 800*	129	*0.28*
223-10550-1	TB.STUD ST GZ 6-S CF	S	6	M14×1,5	33	17	Steel, galvanized	800	*11 600*	41	*0.09*
223-14253-4	TB.STUD ST GZ10-S CF	S	10	M18×1,5	35	22	Steel, galvanized	800	*11 600*	74	*0.16*
223-14253-1	TB.STUD ST GZ16-S CF	S	16	M24×1,5	42	30	Steel, galvanized	630	*9 140*	172	*0.38*
223-14497-8	TB.STUD ST GZ20-S CF	S	20	M30×2	48	36	Steel, galvanized	420	*6 090*	261	*0.58*
223-14253-3	TB.STUD ST GZ30-S CF	S	30	M42×2	62	50	Steel, galvanized	420	*6 090*	605	*1.33*
Stainless steel											
223-14497-1	TB.STUD VA GZ10-L	L	10	M16×1,5	34	19	Stainless steel 1.4571	315	*4 570*	53	*0.12*
223-14497-4	TB.STUD VA GZ20-S	S	20	M30×2	48	36	Stainless steel 1.4571	400	*5 800*	261	*0.58*

Straight tube studs EGE

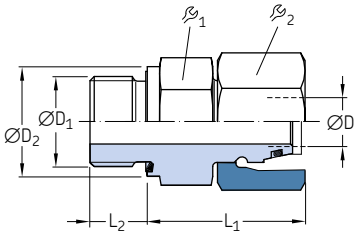

Order number	Designation	Series	Tube ØD	$ØD_1$	$ØD_2$	L_1	L_2			Material	Operating pressure max.		Weight	
			mm		mm	mm	mm	mm	mm		bar	*psi*	g	*lb*
223-14130-7	TB.STUD ST EGE 6-L G 1/8A-ED CF	L	6	G 1/8A	14	24,5	8	14	14	Steel, galv.	500	*7 250*	27	*0.06*
223-13686-1	TB.STUD ST EGE10-L G 1/4A-ED CF	L	10	G 1/4A	19	27,5	12	19	19	Steel, galv.	500	*7 250*	54	*0.12*
223-14130-9	TB.STUD ST EGE10-L G 3/8A-ED CF	L	10	G 3/8A	22	29	12	22	19	Steel, galv.	400	*5 800*	70	*0.15*
223-14187-4	TB.STUD ST EGE10-S G 3/8A-ED CF	S	10	G 3/8A	19	27,5	12	19	19	Steel, galv.	315	*4 570*	44	*0.10*
223-14187-7	TB.STUD ST EGE10-L 1/4 NPT CF	L	10	1/4 NPT	19	27,5	12	19	19	Steel, galv.	315	*4 570*	44	*0.10*
223-10563-8	TB.STUD ST EGE12-L M16x1,5-ED CF	L	12	M16×1,5	22	30,5	12	22	22	Steel, galv.	400	*5 800*	67	*0.15*
223-10563-5	TB.STUD ST EGE12-L G 1/4A-ED CF	L	12	G 1/4A	19	27,5	12	19	22	Steel, galv.	400	*5 800*	61	*0.13*
223-10563-7	TB.STUD ST EGE 6-S G 1/4A-ED CF	S	6	G 1/4A	19	27	12	19	17	Steel, galv.	800	*11 600*	53	*0.12*
223-10563-6	TB.STUD ST EGE12-S G 3/8A-ED CF	S	12	G 3/8A	22	34	12	22	24	Steel, galv.	630	*9 140*	95	*0.21*
223-14130-2	TB.STUD ST EGE30-S 3/4 NPT-ED CF	S	20	3/4 NPT	32	43	16	32	36	Steel, galv.	400	*5 800*	254	*0.56*

Double-edged cutting sleeve unions

T-connectors T

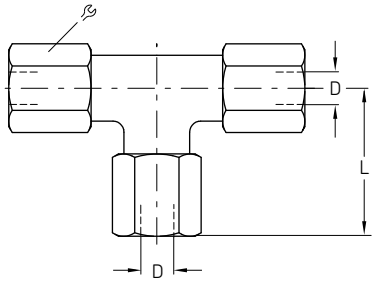

Order number	Designation	Series	Tube ØD	L		Material	Operating pressure max.		Weight	
			mm	mm	mm		bar	*psi*	g	*lb*
Steel, galvanized										
223-12563-5	TB.FITT.ST T 4-LL CF	LL	4	21	10	Steel, galvanized	100	*1 450*	31	*0.07*
223-12484-2	TB.FITT.ST T 6-L CF	L	6	27	14	Steel, galvanized	500	*7 250*	58	*0.13*
223-12484-6	TB.FITT.ST T 8-L CF	L	8	29	17	Steel, galvanized	500	*7 250*	104	*0.23*
223-13057-5	TB.FITT.ST T10-L CF	L	10	30	19	Steel, galvanized	500	*7 250*	111	*0.24*
412-407	TB.FITT.ST T12-L CF	L	12	32	22	Steel, galvanized	400	*5 800*	149	*0.33*
223-12563-2	TB.FITT.ST T15-L CF	L	15	36	27	Steel, galvanized	400	*5 800*	247	*0.54*
418-407	TB.FITT.ST T18-L CF	L	18	40	32	Steel, galvanized	400	*5 800*	383	*0.84*
223-13057-4	TB.FITT.ST T22-L CF	L	22	44	36	Steel, galvanized	250	*3 625*	492	*1.08*
223-12563-9	TB.FITT.ST T10-S CF	S	10	34	22	Steel, galvanized	800	*11 600*	193	*0.43*
223-13057-2	TB.FITT.ST T16-S CF	S	16	43	30	Steel, galvanized	630	*9 140*	418	*0.92*
223-12366-2	TB.FITT.ST T20-S CF	S	20	48	36	Steel, galvanized	420	*6 090*	867	*1.91*
223-12366-6	TB.FITT.ST T30-S CF	S	30	62	50	Steel, galvanized	420	*6 090*	2 274	*5.01*
Stainless steel										
223-13616-3	TB.FITT.VA T10-L	L	10	30	19	Stainless steel 1.4571	315	*4 570*	111	*0.24*
223-12455-1	TB.FITT.VA T10-S	S	10	34	22	Stainless steel 1.4571	630	*9 140*	193	*0.43*
223-12455-5	TB.FITT.VA T16-S	S	16	43	30	Stainless steel 1.4571	400	*5 800*	418	*0.92*
223-12455-2	TB.FITT.VA T20-S	S	20	48	36	Stainless steel 1.4571	400	*5 800*	867	*1.91*

Reducing T-connectors TR

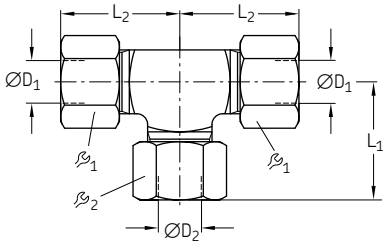

Order number	Designation	Series	Tube $ØD_1$	Tube $ØD_2$	L_1	L_2	$_1$	$_2$	Material	Operating pressure max.		Weight	
			mm	mm	mm	mm	mm	mm		bar	*psi*	g	*lb*
Steel, galvanized													
223-12573-6	TB.FITT.ST TR10/ 6/10-L CF	L	10	6	30	30	19	14	Steel, galvanized	500	*7 250*	94	*0.21*
223-12541-5	TB.FITT.ST TR15/10/15-L CF	L	15	10	36	36	27	19	Steel, galvanized	400	*5 800*	213	*0.47*
223-13025-6	TB.FITT.ST TR12/10/12-S CF	S	12	10	38	38	24	22	Steel, galvanized	630	*9 140*	217	*0.48*
223-12367-2	TB.FITT.ST TR20/10/20-S CF	S	20	10	46	48	36	22	Steel, galvanized	420	*6 090*	503	*1.11*
223-12367-4	TB.FITT.ST TR20/12/20-S CF	S	20	12	46	48	36	24	Steel, galvanized	420	*6 090*	522	*1.15*
Stainless steel													
223-13672-8	TB.FITT.VA TR18/10/18-L	L	18	10	39	40	32	19	Stainless steel 1.4571	315	*4 570*	305	*0.67*
223-13672-3	TB.FITT.VA TR20/10/20-S	S	20	10	46	48	36	22	Stainless steel 1.4571	400	*5 800*	529	*1.17*

Double-edged cutting sleeve unions

Elbow connectors W

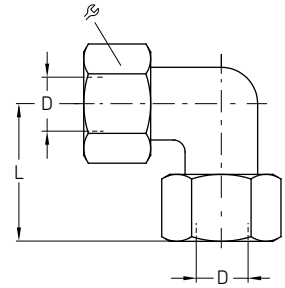

Order number	Designation	Series	Tube ØD	L		Material	Operating pressure max.		Weight	
			mm	mm	mm		bar	*psi*	g	*lb*
Steel, galvanized										
223-12483-2	TB.FITT.ST W6-L CF	L	6	27	14	Steel, galvanized	500	*7 250*	41	*0.09*
223-12483-5	TB.FITT.ST W8-L CF	L	8	29	17	Steel, galvanized	500	*7 250*	60	*0.13*
223-12483-8	TB.FITT.ST W10-L CF	L	10	30	19	Steel, galvanized	500	*7 250*	75	*0.17*
223-12562-2	TB.FITT.ST W15-L CF	L	15	36	27	Steel, galvanized	400	*5 800*	128	*0.28*
443-218-001	TB.FITT.ST W18-L CF	L	18	40	32	Steel, galvanized	400	*5 800*	208	*0.46*
443-290-001	TB.FITT.ST W22-L CF	L	22	44	36	Steel, galvanized	250	*3 625*	267	*0.59*
223-12562-7	TB.FITT.ST W10-S CF	S	10	34	22	Steel, galvanized	800	*11 600*	133	*0.29*
223-12562-8	TB.FITT.ST W16-S CF	S	16	43	30	Steel, galvanized	630	*9 140*	232	*0.51*
223-12365-2	TB.FITT.ST W20-S CF	S	20	48	36	Steel, galvanized	420	*6 090*	333	*0.73*
Stainless steel										
223-14424-5	TB.FITT.VA W 8-L	L	8	29	17	Stainless steel 1.4571	315	*4 570*	60	*0.13*
223-13675-2	TB.FITT.VA W 20-S	S	20	48	36	Stainless steel 1.4571	400	*5 800*	333	*0.73*

Elbow screw-in connectors WE with metrical thread

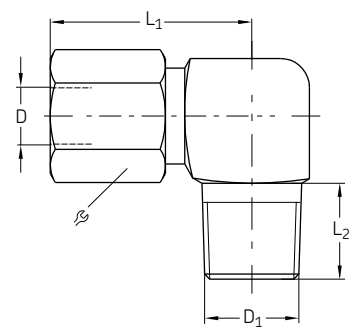

Order number	Designation	Series	Tube ØD	ØD1	L1	L2		Material	Operating pressure max.		Weight	
			mm	mm	mm	mm	mm		bar	*psi*	g	*lb*
Steel, galvanized												
223-13023-2	TB.FITT.ST WE 6-LL M6x1,0K CF	LL	6	M6×1 tap.	19	8	12	Steel, galvanized	100	*1 450*	24	*0.05*
223-13023-3	TB.FITT.ST WE 6-LL M8x1K CF	LL	6	M8×1 tap.	21	8	12	Steel, galvanized	100	*1 450*	24	*0.05*
223-13021-3	TB.FITT.ST WE 6-LL M10x1K CF	LL	6	M10×1 tap.	15	8	12	Steel, galvanized	100	*1 450*	24	*0.05*
223-12362-4	TB.FITT.ST WE 8-LL M10x1K CF	LL	8	M10×1 tap.	17	8	14	Steel, galvanized	100	*1 450*	33	*0.07*
223-12485-8	TB.FITT.ST WE 6-L M10x1K CF	L	6	M10×1 tap.	19	8	14	Steel, galvanized	315	*4 570*	41	*0.09*
223-12362-8	TB.FITT.ST WE 8-L M12x1,5K CF	L	8	M12×1,5 tap.	21	12	17	Steel, galvanized	315	*4 570*	63	*0.14*
410-405	TB.FITT.ST WE10-L M14x1,5K CF	L	10	M14×1,5 tap.	30	12	19	Steel, galvanized	315	*4 570*	125	*0.28*
223-12485-2	TB.FITT.ST WE10-S M16x1,5K CF	S	10	M16×1,5 tap.	25	12	22	Steel, galvanized	400	*5 800*	123	*0.27*
Stainless steel												
404-405-S3	TB.FITT.VA WE 4-LL M 8x1,0K	LL	4	M8×1 tap.	15	8	10	Stainless steel 1.4571	100	*1 450*	18	*0.04*
223-13677-2	TB.FITT.VA WE 6-LL M 8x1,0K	LL	6	M8×1 tap.	21	8	12	Stainless steel 1.4571	100	*1 450*	24	*0.05*

Double-edged cutting sleeve unions

Elbow screw-in connectors WE with Whitworth pipe thread

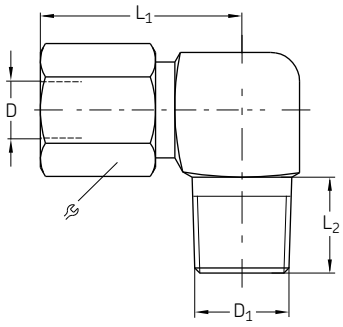

Order number	Designation	Series	Tube ØD	ØD1	L1	L2		Material	Operating pressure max.		Weight	
			mm	in	mm	mm	mm		bar	*psi*	g	*lb*
Steel, galvanized												
223-13021-4	TB.FITT.ST WE 4-LL R 1/8K CF	LL	4	R 1/8	15	8	10	Steel, galvanized	100	*1 450*	21	*0.05*
223-13021-6	TB.FITT.ST WE 8-LL R 1/8K CF	LL	8	R 1/8	17	8	14	Steel, galvanized	100	*1 450*	32	*0.07*
96-6112-0058	TB.FITT.ST WE12-LL R 1/4K CF	LL	12	R 1/4	19	12	19	Steel, galvanized	100	*1 450*	61	*0.13*
223-13048-1	TB.FITT.ST WE 6-L R 1/8K CF	L	6	R 1/8	19	8	14	Steel, galvanized	315	*4 570*	42	*0.09*
223-12380-6	TB.FITT.ST WE 6-L R 1/4K CF	L	6	R 1/4	21	12	14	Steel, galvanized	315	*4 570*	59	*0.13*
408-425W	TB.FITT.ST WE 8-L R 1/8K CF	L	8	R 1/8	21	8	17	Steel, galvanized	315	*4 570*	66	*0.15*
223-14240-5	TB.FITT.ST WE 8-L R 1/4K CF	L	8	R 1/4	21	12	17	Steel, galvanized	315	*4 570*	63	*0.14*
223-13048-5	TB.FITT.ST WE10-L R 1/4K CF	L	10	R 1/4	22	12	19	Steel, galvanized	315	*4 570*	82	*0.18*
412-405W	TB.FITT.ST WE12-L R 3/8K CF	L	12	R 3/8	24	12	22	Steel, galvanized	315	*4 570*	116	*0.26*
223-13021-7	TB.FITT.ST WE15-L R 1/2K CF	L	15	R 1/2	28	14	27	Steel, galvanized	315	*4 570*	141	*0.31*
418-405W	TB.FITT.ST WE18-L R 1/2K CF	L	18	R 1/2	31	14	32	Steel, galvanized	315	*4 570*	230	*0.51*
223-13048-6	TB.FITT.ST WE10-S R 3/8K CF	S	10	R 3/8	25	12	22	Steel, galvanized	400	*5 800*	138	*0.30*
96-1412-0058	TB.FITT.ST WE12-S R 3/8K CF	S	12	R 3/8	29	12	24	Steel, galvanized	400	*5 800*	164	*0.36*
223-13048-8	TB.FITT.ST WE16-S R 1/2K CF	S	16	R 1/2	33	14	30	Steel, galvanized	400	*5 800*	232	*0.51*
Stainless steel												
223-13620-8	TB.FITT.VA WE 6-L R 1/8K	L	6	R 1/8	19	8	14	Stainless steel 1.4571	315	*4 570*	42	*0.09*
223-13677-5	TB.FITT.VA WE 8-L R 1/4K	L	8	R 1/4	21	12	17	Stainless steel 1.4571	315	*4 570*	63	*0.14*
223-12453-1	TB.FITT.VA WE 10-L R 1/4K	L	10	R 1/4	22	12	19	Stainless steel 1.4571	315	*4 570*	82	*0.18*

Double-edged cutting sleeve unions

K-connectors K

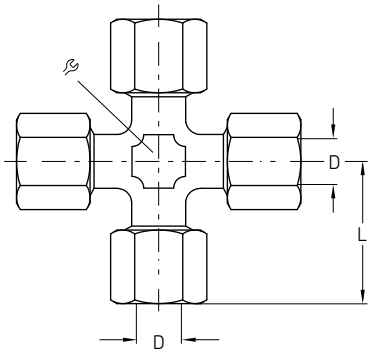

Order number	Designation	Series	Tube ∅D	L		Material	Operating pressure max.		Weight	
			mm	mm	mm		bar	*psi*	g	*lb*
96-2106-0058	TB.FITT.ST K 6-L CF	L	6	27	12	Steel, galvanized	500	*7 252*	81	*0.17*
446-308-001	TB.FITT.ST K 8-L CF	L	8	29	12	Steel, galvanized	500	*7 252*	108	*0.24*
446-310-001	TB.FITT.ST K10-L CF	L	10	30	14	Steel, galvanized	500	*7 252*	134	*0.29*
446-312-001	TB.FITT.ST K12-L CF	L	12	32	17	Steel, galvanized	400	*5 800*	184	*0.40*
446-315-001	TB.FITT.ST K15-L CF	L	15	36	19	Steel, galvanized	400	*5 800*	304	*0.67*
446-318-001	TB.FITT.ST K18-L CF	L	18	40	24	Steel, galvanized	400	*5 800*	460	*1.01*
96-2122-0058	TB.FITT.ST K22-L CF	L	22	44	27	Steel, galvanized	250	*3 626*	586	*1.29*
223-12432-2	TB.FITT.ST K10-S CF	S	10	34	17	Steel, galvanized	900	*13 053*	232	*0.51*
223-12432-8	TB.FITT.ST K20-S CF	S	20	48	27	Steel, galvanized	400	*5 800*	772	*1.70*

Double-edged cutting sleeve unions

Female connector straight GAI with mectrical thread

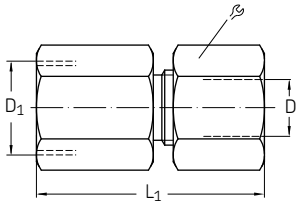

Order number	Designation	Series	Tube ØD	ØD1	L1	L2		Material	Operating pressure max.		Weight	
			mm	mm	mm	mm	mm		bar	*psi*	g	*lb*
223-10307-2	TB.FITT.ST GAI 6-L M10x1,0 CF	L	6	M10×1	26,5	19,5	14	Steel, galvanized	315	*4 570*	30	*0.07*
96-0508-0060	TB.FITT.ST GAI 8-L M12x1,5 CF	L	8	M12×1,5	31	24	17	Steel, galvanized	315	*4 570*	49	*0.11*
223-13033-2	TB.FITT.ST GAI10-L M14x1,5 CF	L	10	M14×1,5	32	25	19	Steel, galvanized	315	*4 570*	60	*0.13*
96-0512-0060	TB.FITT.ST GAI12-L M16x1,5 CF	L	12	M16×1,5	33	26	22	Steel, galvanized	315	*4 570*	80	*0.18*
223-13693-9	TB.FITT.ST GAI18-L M22x1,5 CF	L	18	M22×1,5	37	29,5	32	Steel, galvanized	315	*4 570*	179	*0.39*
96-0606-0060	TB.FITT.ST GAI 6-S M12x1,5 CF	S	6	M12x1	33	26	17	Steel, galvanized	400	*5 800*	54	*0.12*
96-0608-0060	TB.FITT.ST GAI 8-S M14x1,5 CF	S	8	M14×1,5	33	26	19	Steel, galvanized	400	*5 800*	73	*0.16*

Female connector straight GAI with Whitworth pipe thread

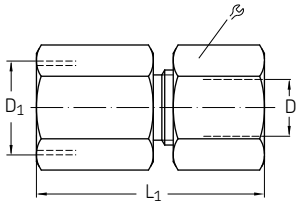

Order number	Designation	Series	Tube ØD	ØD1	L1	L2		Material	Operating pressure max.		Weight	
			mm	in	mm	mm	mm		bar	*psi*	g	*lb*
Steel, galvanized												
223-13693-4	TB.FITT.ST GAI 6-L G1/8 CF	L	6	G 1/8	26	19	14	Steel, galvanized	315	*4 570*	30	*0.07*
223-13693-6	TB.FITT.ST GAI 8-L G1/4 CF	L	8	G 1/4	31	24	19	Steel, galvanized	315	*4 570*	56	*0.12*
223-13693-2	TB.FITT.ST GAI10-L G1/4 CF	L	10	G 1/4	32	25	19	Steel, galvanized	315	*4 570*	61	*0.13*
96-0712-0060	TB.FITT.ST GAI12-L G3/8 CF	L	12	G 3/8	33	26	24	Steel, galvanized	315	*4 570*	92	*0.20*
96-0715-0060	TB.FITT.ST GAI15-L G1/2 CF	L	15	G 1/2	38	31	27	Steel, galvanized	315	*4 570*	134	*0.30*
96-0718-0060	TB.FITT.ST GAI18-L G1/2 CF	L	18	G 1/2	38	30,5	27	Steel, galvanized	315	*4 570*	157	*0.35*
223-12273-2	TB.FITT.ST GAI22-L G3/4 CF	L	22	G 3/4	43	35,5	36	Steel, galvanized	160	*2 320*	262	*0.58*
223-13693-1	TB.FITT.ST GAI10-S G3/8 CF	S	10	G 3/8	33	26	24	Steel, galvanized	315	*4 570*	84	*0.19*
Stainless steel												
223-14116-9	TB.FITT.VA GAI20-S G3/4	S	20	G 3/4	45	34,5	36	Stainless steel 1.4571	315	*4 570*	309	*0.68*

Double-edged cutting sleeve unions

Check valves GERV

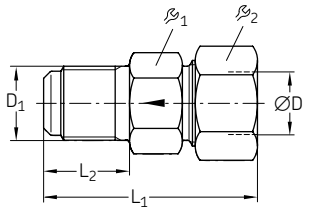

Order number	Designation	Series	Tube ØD	ØD1	L1	L2			Material	Operating pressure max.		Weight	
			mm		mm	mm	mm	mm		bar	*psi*	g	*lb*
Steel, galvanized													
223-12290-7	CHECK VALVE ST GERV 6-LL G 1/8A L CF	LL	6	G 1/8	30	11	12	11	Steel, galvanized	100	*1 450*	16	*0.04*
223-13052-8	CHECK VALVE ST GERV 6-LL M10×1 L CF	LL	6	M0×1	30	11	12	11	Steel, galvanized	100	*1 450*	15	*0.03*
223-13051-1	CHECK VALVE ST GERV 8-L G 1/4A L CF	L	8	G 1/4	42	14	17	17	Steel, galvanized	400	*5 800*	45	*0.10*
223-13051-2	CHECK VALVE ST GERV10 -L G 1/4A L CF	L	10	G 1/4	41	14	19	19	Steel, galvanized	400	*5 800*	60	*0.13*
223-12372-9	CHECK VALVE ST GERV 6-S G 1/4A L CF	S	6	G 1/4	44	14	17	17	Steel, galvanized	420	*6 090*	60	*0.13*
Stainless steel													
223-12535-9	CHECK VALVE VA GERV 6-LL G 1/8A L	LL	6	G 1/8	30	11	12	11	Stainless steel 1.4571	100	*1 450*	16	*0.04*
223-11185-1	CHECK VALVE VA GERV 6-S G 1/4A L	S	6	G 1/4	44	14	17	17	Stainless steel 1.4571	400	*5 800*	60	*0.13*

Check valves RHV

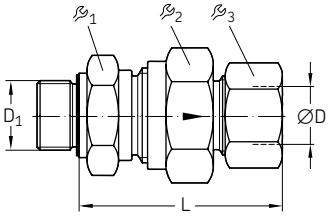

Order number	Designation	Series	Tube ØD	ØD1	L				Material	Operating pressure max.		Weight	
			mm	in	mm	mm	mm	mm		bar	*psi*	g	*lb*
Steel, galvanized													
223-14464-9	CHECK VALVE ST RHV 6-L G 1/8A V CF	L	6	G 1/8	42,5	17	17	14	Steel, galvanized	400	*5 800*	59	*0.13*
223-13079-1	CHECK VALVE ST RHV 8-L G 1/4A V CF	L	8	G 1/4	44,5	19	19	17	Steel, galvanized	400	*5 800*	89	*0.20*
223-12291-4	CHECK VALVE ST RHV10-L G 1/4A V CF	L	10	G 1/4	53	22	24	19	Steel, galvanized	400	*5 800*	126	*0.28*
223-12429-1	CHECK VALVE ST RHV 6-S G 1/4A V CF	S	6	G 1/4	46	19	19	17	Steel, galvanized	420	*6 090*	82	*0.18*
223-12291-2	CHECK VALVE ST RHV 8-S G 1/4A V CF	S	8	G 1/4	46	19	19	19	Steel, galvanized	420	*6 090*	102	*0.22*
223-12291-6	CHECK VALVE ST RHV10-S G 3/8A V CF	S	10	G 3/8	54	22	24	22	Steel, galvanized	420	*6 090*	166	*0.37*

Double-edged cutting sleeve unions

Check valves RHZ

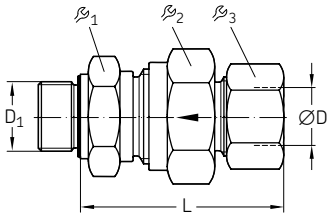

Order number	Designation	Series	Tube ØD	ØD1	L	1	2	3	Material	Operating pressure max.		Weight	
			mm		mm	mm	mm	mm		bar	*psi*	g	*lb*
Steel, galvanized													
223-12292-2	CHECK VALVE ST RHZ 6-L G 1/8A-ED L CF	L	6	G 1/8	41	17	17	14	Steel, galvanized	400	*5 800*	51	*0.11*
223-12292-5	CHECK VALVE ST RHZ10-L G 1/4A L CF	L	10	G 1/4	53	22	24	19	Steel, galvanized	400	*5 800*	148	*0.33*
223-13706-3	CHECK VALVE ST RHZ 6-L M10×1.0 L CF	L	6	M10×1	41	17	17	14	Steel, galvanized	400	*5 800*	51	*0.11*
223-12292-9	CHECK VALVE ST RHZ 6-S G 1/4A L CF	S	6	G 1/4	46	19	19	17	Steel, galvanized	420	*6 090*	80	*0.18*
Stainless steel													
223-13692-3	CHECK VALVE VA RHZ 6-L G 1/8A L	L	6	G 1/8	41	17	17	14	Stainless steel 1.4571	250	*3 625*	51	*0.11*

Check valves RHD

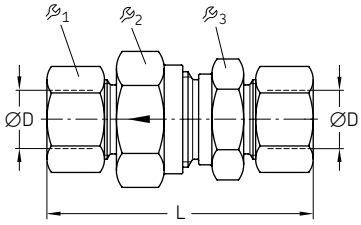

Order number	Designation	Series	Tube ØD	L	1	2	3	Material	Operating pressure max.		Weight	
			mm	mm	mm	mm	mm		bar	*psi*	g	*lb*
Steel, galvanized												
223-13643-8	CHECK VALVE ST RHD 6-L CF	L	6	58	17	17	14	Steel, galvanized	400	*5 800*	70	*0.15*
223-13643-3	CHECK VALVE ST RHD 8-L CF	L	8	59	19	19	17	Steel, galvanized	400	*5 800*	95	*0.21*
223-13643-2	CHECK VALVE ST RHD10-L CF	L	10	69,5	22	24	19	Steel, galvanized	400	*5 800*	146	*0.32*
223-14464-8	CHECK VALVE ST RHD18-L CF	L	18	83,5	36	36	32	Steel, galvanized	400	*5 800*	428	*0.94*
223-13643-1	CHECK VALVE ST RHD10-S CF	S	10	72,5	22	24	22	Steel, galvanized	420	*6 090*	189	*0.42*
223-13643-4	CHECK VALVE ST RHD16-S CF	S	16	86,5	32	36	30	Steel, galvanized	420	*6 090*	430	*0.95*
223-13643-6	CHECK VALVE ST RHD20-S CF	S	20	97,5	41	46	36	Steel, galvanized	420	*6 090*	732	*1.61*
Stainless steel												
223-13770-6	CHECK VALVE VA RHD 6-L	L	6	58	17	17	14	Stainless steel 1.4571	250	*3 625*	70	*0.15*
223-13770-5	CHECK VALVE VA RHD20-S	S	20	97,5	41	46	36	Stainless steel 1.4571	250	*3 625*	732	*1.61*

Double-edged cutting sleeve unions

Straight bulkhead connectors SV

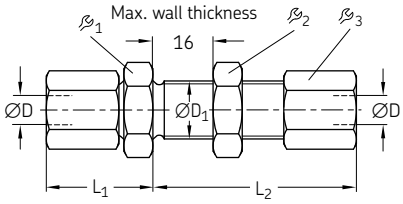

Order number	Designation	Series	Tube ØD	ØD1	L1	L2				Material	Operating pressure max.		Weight	
			mm	mm	mm	mm	mm	mm	mm		bar	*psi*	g	*lb*
Steel, galvanized														
223-12368-4	TB.FITT.ST SV 6-L CF	L	6	12,5	22	42	17	17	14	Steel, galvanized	500	*7 250*	63	*0.14*
223-12368-6	TB.FITT.ST SV 8-L CF	L	8	14,5	23	42	19	19	17	Steel, galvanized	500	*7 250*	84	*0.19*
223-12368-8	TB.FITT.ST SV 10-L CF	L	10	16,5	25	43	22	22	19	Steel, galvanized	500	*7 250*	109	*0.24*
223-13698-4	TB.FITT.ST SV 12-L CF	L	12	18,5	25	44	24	24	22	Steel, galvanized	400	*5 800*	134	*0.30*
223-12564-2	TB.FITT.ST SV 15-L CF	L	15	22,5	27	46	27	30	27	Steel, galvanized	400	*5 800*	222	*0.49*
223-12564-8	TB.FITT.ST SV 18-L CF	L	18	26,5	30	49	32	36	32	Steel, galvanized	400	*5 800*	334	*0.74*
422-416	TB.FITT.ST SV22-L CF	L	22	30,5	33	51	36	41	36	Steel, galvanized	250	*3 625*	432	*0.95*
223-12564-6	TB.FITT.ST SV 10-S CF	S	10	18,5	31	46	24	24	22	Steel, galvanized	800	*11 600*	180	*0.40*
223-12368-2	TB.FITT.ST SV 20-S CF	S	20	30,5	39	55	41	41	36	Steel, galvanized	420	*6 090*	688	*1.52*
Stainless steel														
223-13671-9	TB.FITT.VA SV 8-S	S	8	16,5	28	44	22	22	19	Stainless steel 1.4571	630	*9 140*	133	*0.29*
223-12564-3	TB.FITT.VA SV 10-S	S	10	18,5	31	46	24	24	22	Stainless steel 1.4571	630	*9 140*	180	*0.40*
223-13671-2	TB.FITT.VA SV 20-S	S	20	30,5	39	55	41	41	36	Stainless steel 1.4571	400	*5 800*	688	*1.52*

Elbow bulkhead connectors WSV

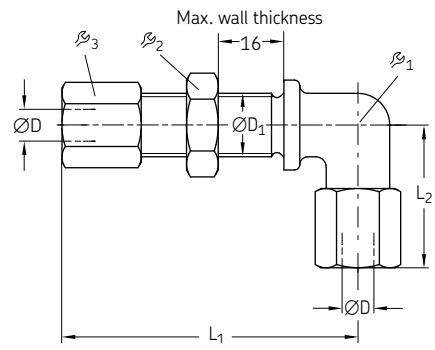

Order number	Designation	Series	Tube ØD	ØD1	L1	L2				Material	Operating pressure max.		Weight	
			mm	mm	mm	mm	mm	mm	mm		bar	*psi*	g	*lb*
Steel, galvanized														
223-13050-4	TB.FITT.ST WSV 6-L CF	L	6	12,5	48	27	12	17	14	Steel, galvanized	315	*4 570*	75	*0.17*
223-12409-6	TB.FITT.ST WSV 8-L CF	L	8	14,5	51	29	12	19	17	Steel, galvanized	315	*4 570*	95	*0.21*
223-12409-9	TB.FITT.ST WSV10-L CF	L	10	16,5	53	30	14	22	19	Steel, galvanized	315	*4 570*	120	*0.26*
412-409	TB.FITT.ST WSV12-L CF	L	12	18,5	56	32	17	24	22	Steel, galvanized	315	*4 570*	141	*0.31*
223-12409-8	TB.FITT.ST WSV15-L CF	L	15	22,5	61	36	19	30	27	Steel, galvanized	315	*4 570*	184	*0.41*
418-409	TB.FITT.ST WSV18-L CF	L	18	26,5	64	40	24	36	32	Steel, galvanized	315	*4 570*	374	*0.82*
223-13050-2	TB.FITT.ST WSV10-S CF	S	10	18,5	57	34	17	24	22	Steel, galvanized	630	*9 140*	196	*0.43*
223-12409-2	TB.FITT.ST WSV20-S CF	S	20	30,5	74	48	27	41	36	Steel, galvanized	400	*5 800*	616	*1.36*
Stainless steel														
223-10364-6	TB.FITT.VA WSV 8-S	S	8	16,5	54	32	14	22	19	Stainless steel 1.4571	630	*9 140*	155	*0.34*
223-10364-3	TB.FITT.VA WSV10-S	S	10	18,5	57	34	17	24	22	Stainless steel 1.4571	630	*9 140*	196	*0.43*

Double-edged cutting sleeve unions

Banjo fittings SWVE with metrical thread

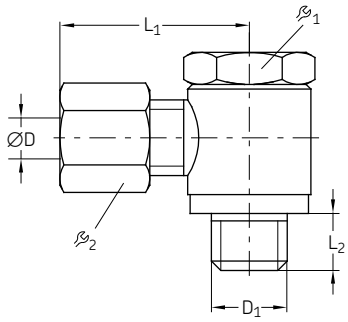

Order number	Designation	Series	Tube ØD	D_1	L_1	L_2			Material	Operating pressure max.		Weight	
			mm	mm	mm	mm	mm	mm		bar	*psi*	g	*lb*
Steel, galvanized													
223-12480-2	TB.FITT.ST SWVE 4-LL M 8x1 CF	LL	4	M8×1	20	6	12	10	Steel, galvanized	63	*915*	22	*0.05*
223-12480-7	TB.FITT.ST SWVE 6-LL M10x1 CF	LL	6	M10×1	22	6	14	12	Steel, galvanized	63	*915*	36	*0.08*
223-12369-7	TB.FITT.ST SWVE 6-L M10x1 CF	L	6	M10×1	25	6	14	14	Steel, galvanized	160	*2 320*	43	*0.09*
96-7808-0058	TB.FITT.ST SWVE 8-L M12x1,5 CF	L	8	M12×1,5	27	9	17	17	Steel, galvanized	160	*2 320*	68	*0.15*
445-535-101	TB.FITT.ST SWVE10-L M14x1,5 CF	L	10	M14×1,5	29	9	19	19	Steel, galvanized	160	*2 320*	89	*0.20*
96-7812-0058	TB.FITT.ST SWVE12-L M16x1,5 CF	L	12	M16×1,5	30	9	21	22	Steel, galvanized	100	*1 450*	128	*0.28*
96-7815-0058	TB.FITT.ST SWVE15-L M18x1,5 CF	L	15	M18×1,5	33	9	24	27	Steel, galvanized	100	*1 450*	185	*0.41*
96-7818-0058	TB.FITT.ST SWVE18-L M22x1,5 CF	L	18	M22×1,5	37	11	27	32	Steel, galvanized	100	*1 450*	309	*0.68*
96-7822-0058	TB.FITT.ST SWVE22-L M26x1,5 Z3	L	22	M26×1,5	42	13	32	36	Steel, galvanized	100	*1 450*	440	*0.97*
223-13669-4	TB.FITT.ST SWVE10-S M16x1,5 CF	S	10	M16×1,5	32	9	22	22	Steel, galvanized	100	*1 450*	140	*0.31*
96-8012-0058	TB.FITT.ST SWVE12-S M18x1,5 CF	S	12	M18×1,5	33	9	24	24	Steel, galvanized	100	*1 450*	172	*0.38*
96-8014-0058	TB.FITT.ST SWVE14-S M20x1,5 Z3	S	14	M20×1,5	38	11	27	27	Steel, galvanized	100	*1 450*	236	*0.52*
96-8016-0058	TB.FITT.ST SWVE16-S M22x1,5 Z3	S	16	M22×1,5	40	11	27	30	Steel, galvanized	100	*1 450*	324	*0.71*
Stainless steel													
223-12456-6	TB.FITT.VA SWVE 6-LL M10x1	LL	6	M10×1	22	6	14	12	Stainless steel 1.4571	63	*915*	36	*0.08*
223-14089-9	TB.FITT.VA SWVE 6-L M10x1	L	6	M10×1	25	6	14	14	Stainless steel 1.4571	160	*2 320*	43	*0.09*

Banjo fittings SWVE with Whitworth pipe thread

Order number	Designation	Series	Tube ØD	D_1	L_1	L_2			Material	Operating pressure max.		Weight	
			mm	in	mm	mm	mm	mm		bar	*psi*	g	*lb*
Steel, galvanized													
223-13629-1	TB.FITT.ST SWVE 4-LL G 1/8A CF	LL	4	G 1/8A	21	6	14	10	Steel, galvanized	63	*915*	32	*0.07*
223-12479-9	TB.FITT.ST SWVE 6-LL G 1/8A CF	LL	6	G 1/8A	22	6	14	12	Steel, galvanized	63	*915*	35	*0.08*
223-12479-8	TB.FITT.ST SWVE 8-LL G 1/8A CF	LL	8	G 1/8A	23	6	14	14	Steel, galvanized	63	*915*	38	*0.08*
223-12479-5	TB.FITT.ST SWVE 6-L G 1/8A CF	L	6	G 1/8A	25	6	14	14	Steel, galvanized	160	*2 320*	43	*0.09*
223-12284-7	TB.FITT.ST SWVE 8-L G 1/4A CF	L	8	G 1/4A	28	9	19	17	Steel, galvanized	160	*2 320*	82	*0.18*
223-12369-9	TB.FITT.ST SWVE10-L G 1/4A CF	L	10	G 1/4A	29	9	19	22	Steel, galvanized	160	*2 320*	87	*0.19*
223-13669-3	TB.FITT.ST SWVE12-L G 3/8A CF	L	12	G 3/8A	30	9	19	22	Steel, galvanized	100	*1 450*	130	*0.29*
223-12285-8	TB.FITT.ST SWVE 6-S G 1/4A CF	S	6	G 1/4A	30	9	19	17	Steel, galvanized	160	*2 320*	88	*0.19*
223-12285-9	TB.FITT.ST SWVE 8-S G 1/4A CF	S	8	G 1/4A	30	9	19	19	Steel, galvanized	160	*2 320*	96	*0.21*
223-12285-5	TB.FITT.ST SWVE10-S G 3/8A CF	S	10	G 3/8A	32	9	22	22	Steel, galvanized	100	*1 450*	142	*0.31*
223-12285-6	TB.FITT.ST SWVE12-S G 3/8A CF	S	12	G 3/8A	33	9	24	24	Steel, galvanized	100	*1 450*	185	*0.41*
96-7914-0058	TB.FITT.ST SWVE14-S G 1/2A Z3	S	14	G 1/2A	38	11	27	27	Steel, galvanized	100	*1 450*	234	*0.52*
96-7916-0058	TB.FITT.ST SWVE16-S G 1/2A CF	S	16	G 1/2A	40	11	27	30	Steel, galvanized	100	*1 450*	321	*0.71*
223-12285-7	TB.FITT.ST SWVE20-S G 3/4A CF	S	20	G 3/4A	46	13	32	36	Steel, galvanized	100	*1 450*	472	*1.04*
Stainless steel													
223-12456-7	TB.FITT.VA SWVE 6-LL G 1/8A	LL	6	G 1/8A	22	6	14	12	Stainless steel 1.4571	63	*915*	35	*0.08*
223-12456-9	TB.FITT.VA SWVE 8-L G 1/4A	L	8	G 1/4A	28	9	19	17	Stainless steel 1.4571	160	*2 320*	82	*0.18*
223-12456-1	TB.FITT.VA SWVE 10-L G 1/4A	L	10	G 1/4A	29	9	19	22	Stainless steel 1.4571	160	*2 320*	87	*0.19*
223-10389-4	TB.FITT.VA SWVE 6-S G 1/4A	S	6	G 1/4A	22	9	19	17	Stainless steel 1.4571	160	*2 320*	45	*0.10*

Double-edged cutting sleeve unions

Banjo fittings WHK (high-pressure) [1] with metrical thread

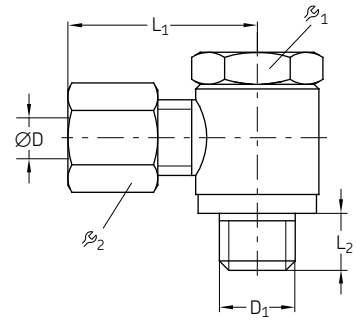

Order number	Designation	Series	Tube ØD	D_1	L_1	L_2			Material	Operating pressure max.		Weight	
			mm	mm	mm	mm	mm	mm		bar	*psi*	g	*lb*
96-5506-0058	TB.FITT. ST WHK 6-S M12x1,5 CF	S	6	**M12×1,5**	27	12	17	17	Steel, galvanized	315	*4 569*	75	*0.16*
96-8006-0058	TB.FITT. ST WHK 6-S M12x1,5 CF	S	6	**M12×1,5**	30	12	17	17	Steel, galvanized	315	*4 569*	75	*0.16*
96-7108-0058	TB.FITT. ST WHK 8-LL M10x1,0 CF	LL	8	**M10×1,0**	23	8	13	14	Steel, galvanized	100	*1 450*	35	*0.07*
96-8008-0058	TB.FITT. ST WHK 8-S M14x1,5 CF	S	8	**M14×1,5**	30	12	17	19	Steel, galvanized	315	*4 569*	84	*0.18*
96-5510-0058	TB.FITT. ST WHK10-S M16x1,5 CF	S	10	**M16×1,5**	32	12	22	22	Steel, galvanized	315	*4 569*	138	*0.30*
223-13679-9	TB.FITT. ST WHK10-S M16x1,5-CS CF	S	10	**M16×1,5**	32	12	22	22	Steel, galvanized	420	*6 092*	138	*0.30*
223-13679-6	TB.FITT. ST WHK12-L M14x1,5-CS CF	L	12	**M14×1,5**	31	12	17	19	Steel, galvanized	250	*3 626*	102	*0.22*
96-5315-0058	TB.FITT. ST WHK15-L M18x1,5 CF	L	15	**M18×1,5**	34	12	24	27	Steel, galvanized	250	*3 626*	182	*0.40*

1) WHK means improved and consolidated WH fittings

Banjo fittings WH and WHK (high-pressure) [1] with Whitworth pipe thread

Order number	Designation	Series	Tube ØD	D_1	L_1	L_2			Material	Operating pressure max.		Weight	
			mm		mm	mm	mm	mm		bar	*psi*	g	*lb*
Steel, galvanized													
445-516-061	TB.FITT. ST WHK 6-L G 1/4A CF	L	6	G 1/8 A	25	8	13	14	Steel, galvanized	250	*3 626*	35	*0.07*
96-5208-0058-E0	TB.FITT. ST WHK 8-L G 1/4A CF	L	8	G 1/4 A	27	12	17	17	Steel, galvanized	250	*3 626*	70	*0.15*
223-13679-8	TB.FITT. ST WHK10-L G 1/4A-CS CF	L	10	G 1/4 A	29	12	17	19	Steel, galvanized	420	*6 092*	73	*0.16*
96-5410-0058	TB.FITT. ST WHK10-S G 1/8A CF	S	10	G 3/8 A	32	12	22	22	Steel, galvanized	315	*4 570*	140	*0.30*
223-14256-4	TB.FITT. ST XWHK10-S G 3/8A CF [2]	S	10	G 3/8 A	32	12	22	22	Steel, galvanized	315	*4 570*	140	*0.30*
223-13679-3	TB.FITT.ST WH10-S G3/8A-KD CF	S	10	G 3/8 A	35	12	24	22	Steel, galvanized	400	*5 800*	212	*0.47*
223-14256-3	TB.FITT. ST XWHK12-L G 3/8A CF [2]	L	12	G 3/8 A	31	12	22	22	Steel, galvanized	250	*3 626*	135	*0.29*
96-5212-0058	TB.FITT. ST WHK12-L G 3/8A CF	L	12	G 3/8 A	31	12	22	22	Steel, galvanized	250	*3 626*	135	*0.29*
223-12539-6	TB.FITT. ST WHK12-L G 3/4A CF	L	12	G 3/8 A	31	12	22	22	Steel, galvanized	420	*6 092*	135	*0.29*
96-5215-0058	TB.FITT. ST WHK15-L G 1/2A CF	L	15	G 1/2 A	36	14	27	27	Steel, galvanized	250	*3 626*	254	*0.55*
96-5416-0058	TB.FITT. ST WHK16-S G 1/2A CF	S	16	G 1/2 A	40	14	27	30	Steel, galvanized	315	*4 570*	266	*0.58*
445-513-181	TB.FITT. ST WHK18-L G 1/2A CF	L	18	G 1/2 A	37	14	27	32	Steel, galvanized	250	*3 626*	260	*0.57*
445-517-222	TB.FITT. ST WHK22-L G 3/4A CF	L	22	G 3/4 A	42	16	32	36	Steel, galvanized	160	*2 320*	413	*0.91*
Stainless steel													
223-14238-4	TB.FITT.VA WH10-L G1/4A	L	10	G 1/4 A	30	12	19	19	Stainless steel 1.4571	315	*4 570*	123	*0.27*
223-10057-7	TB.FITT. VA XWHK16-S G 1/2A-CS [2]	S	16	G1/2 A	40	14	27	30	Stainless steel 1.4571	350	*5 076*	266	*0.58*
223-10057-8	TB.FITT. VA XWHK10-S G 3/8A-CS [2]	S	16	G3/8 A	42	12	22	22	Stainless steel 1.4571	420	*6 092*	140	*0.30*

1) WHK means improved and consolidated WH fittings
2) Prefix X means fitting without cutting sleeve and without union nut

Double-edged cutting sleeve unions

Reducing connectors RED with cylindrical thread

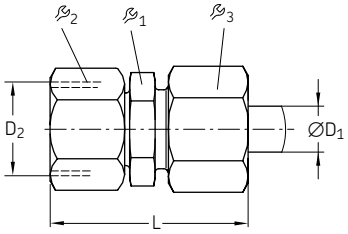

Order number	Designation	Series	Tube ØD	Tube $ØD_1$	D_2	L				Material	Operating pressure max.		Weight	
			mm	mm	mm	mm	mm	mm	mm		bar	*psi*	g	*lb*
96-1406-0060	TB.FITT.ST RED 6/ 4-LL CF	LL	6	4	M10×1	29	–	12	10	Steel, galvanized	100	*1 450*	21	*0.05*
96-1408-0060	TB.FITT.ST RED 8/ 4-LL CF	LL	8	4	M12×1	29	–	14	10	Steel, galvanized	100	*1 450*	28	*0.06*
96-1410-0060	TB.FITT.ST RED 8/ 6-LL CF	LL	8	6	M12×1	29	–	14	12	Steel, galvanized	100	*1 450*	32	*0.07*
223-10670-3	TB.FITT.ST RED 8/ 6-L CF	L	8	6	M14×1,5	38,0	12	17	14	Steel, galvanized	500	*7 250*	36	*0.08*
223-12582-5	TB.FITT.ST RED10/ 6-L CF	L	10	6	M16×1,5	40,0	14	19	14	Steel, galvanized	500	*7 250*	48	*0.11*
473-808-371	TB.FITT.ST RED10/ 8-L CF	L	10	8	M16x1,5	40	17	22	17	Steel, galvanized	500	*7 250*	58	*0.13*
223-13699-7	TB.FITT.ST RED12/ 6-L CF	L	12	6	M20x1,5	40	17	22	14	Steel, galvanized	400	*5 800*	60	*0.13*
473-808-392	TB.FITT.ST RED12/ 8-L CF	L	12	8	M18x1,5	40	17	22	17	Steel, galvanized	400	*5 800*	69	*0.15*
223-14293-2	TB.FITT.ST RED12/10-L CF	L	12	10	M18×1,5	41,0	17	22	19	Steel, galvanized	400	*5 800*	63	*0.14*
223-14152-2	TB.FITT.ST RED15/ 8-L CF	L	15	8	M22×1,5	43,0	19	27	17	Steel, galvanized	400	*5 800*	102	*0.22*
223-14293-4	TB.FITT.ST RED15/10-L CF	L	15	10	M22×1,5	44,0	19	27	19	Steel, galvanized	400	*5 800*	104	*0.23*
223-14293-8	TB.FITT.ST RED18/15-L CF	L	18	15	M26×1,5	45,0	24	32	27	Steel, galvanized	400	*5 800*	162	*0.36*
223-10688-1	TB.FITT.ST RED 8/ 6-S CF	S	8	6	M16×1,5	42	14	19	17	Steel, galvanized	800	*11 600*	61	*0.13*
223-10187-1	TB.FITT.ST RED10/ 6-S CF	S	10	6	M18×1,5	42	17	22	17	Steel, galvanized	800	*11 600*	74	*0.16*
223-13054-4	TB.FITT.ST RED10/ 8-S CF	S	10	8	M18×1,5	42	17	22	19	Steel, galvanized	800	*11 600*	81	*0.18*
223-12287-8	TB.FITT.ST RED12/ 8-S CF	S	12	8	M20×1,5	44	17	24	19	Steel, galvanized	630	*9 140*	91	*0.20*
223-12288-2	TB.FITT.ST RED12/10-S CF	S	12	10	M20×1,5	46	19	24	22	Steel, galvanized	630	*9 140*	109	*0.24*
96-1633-0060	TB.FITT.ST RED14/10-S CF	S	14	10	M22×1,5	47	19	27	22	Steel, galvanized	630	*9 140*	125	*0.28*
96-1642-0060	TB.FITT.ST RED16/ 8-S CF	S	16	8	M24×1,5	47	22	30	19	Steel, galvanized	630	*9 140*	137	*0.30*
223-14293-1	TB.FITT.ST RED16/10-S CF	S	16	10	M24×1,5	48	22	30	22	Steel, galvanized	630	*9 140*	149	*0.33*
96-1644-0060	TB.FITT.ST RED16/12-S CF	S	16	12	M24×1,5	48	22	30	24	Steel, galvanized	630	*9 140*	156	*0.34*
223-12577-8	TB.FITT.ST RED20/ 6-S CF	S	20	6	M30×2	51	27	36	17	Steel, galvanized	420	*6 090*	191	*0.42*
96-1652-0060	TB.FITT.ST RED20/ 8-S CF	S	20	8	M30×2	51	27	36	19	Steel, galvanized	420	*6 090*	197	*0.43*
223-12577-2	TB.FITT.ST RED20/10-S CF	S	20	10	M30×2	52	27	36	22	Steel, galvanized	420	*6 090*	208	*0.46*
223-12580-2	TB.FITT.ST RED20/12-S CF	S	20	12	M30×2	52	27	36	24	Steel, galvanized	420	*6 090*	215	*0.47*
223-13759-7	TB.FITT.ST RED20/16-S CF	S	20	16	M30×2	55	27	36	30	Steel, galvanized	420	*6 090*	254	*0.56*

Reducing connectors KOR with cylindrical thread

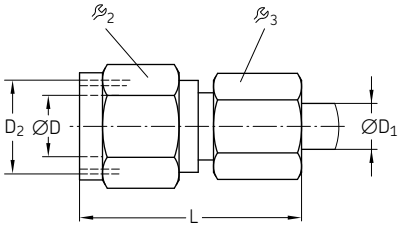

Order number	Designation	Series	Tube ØD	Tube $ØD_1$	D_2	L			Material	Operating pressure max.		Weight	
			mm	mm	mm	mm	mm	mm		bar	*psi*	g	*lb*
96-1541-0060	TB.FITT.ST KOR18/ 6-L CF	L	18	6	M26×1,5	43,0	32	14	Steel, galvanized	400	*5 800*	121	*0.27*
96-1542-0060	TB.FITT.ST KOR18/ 8-L CF	L	18	8	M26×1,5	43,0	32	17	Steel, galvanized	400	*5 800*	128	*0.28*
96-1543-0060	TB.FITT.ST KOR18/10-L CF	L	18	10	M26×1,5	44,0	32	19	Steel, galvanized	400	*5 800*	131	*0.29*
96-1551-0060	TB.FITT.ST KOR22/ 6-L CF	L	22	6	M30×2	47,0	36	14	Steel, galvanized	250	*3 625*	170	*0.37*
96-1556-0060	TB.FITT.ST KOR22/18-L CF	L	22	18	M30×2	50,0	36	32	Steel, galvanized	250	*3 625*	235	*0.52*

Double-edged cutting sleeve unions

Connectors for pressure gauges MAV

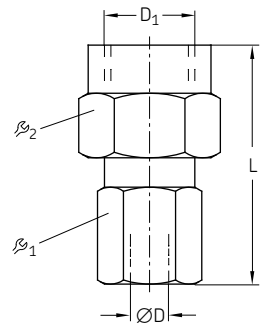

Order number	Designation	Series	Tube ØD	D1	L			Material	Operating pressure max.		Weight	
			mm	in	mm	mm	mm		bar	*psi*	g	*lb*
Steel, galvanized												
223-12481-4	TB.FITT.ST MAV 6-L G 1/4 CF	L	6	G 1/4	37	19	14	Steel, galvanized	315	*4 570*	49	*0.11*
223-12481-6	TB.FITT.ST MAV 8-L G 1/4 CF	L	8	G 1/4	37	19	17	Steel, galvanized	315	*4 570*	55	*0.12*
223-13028-2	TB.FITT.ST MAV10-L G 1/4 CF	L	10	G 1/4	38	19	19	Steel, galvanized	315	*4 570*	62	*0.14*
223-12481-8	TB.FITT.ST MAV12-L G 1/4 CF	L	12	G 1/4	38	19	22	Steel, galvanized	315	*4 570*	71	*0.16*
96-8906-0058	TB.FITT.ST MAV 6-S G 1/2 CF	S	6	G 1/2	42,5	27	17	Steel, galvanized	630	*9 140*	95	*0.21*
441-108-132	TB.FITT.ST MAV 8-S G 1/2 CF	S	8	G 1/2	46	27	19	Steel, galvanized	630	*9 140*	105	*0.23*
223-13028-4	TB.FITT.ST MAV10-S G 1/2 CF	S	10	G 1/2	47	27	22	Steel, galvanized	630	*9 140*	111	*0.24*
223-12286-8	TB.FITT.ST MAV12-S G 1/2 CF	S	12	G 1/2	47	27	24	Steel, galvanized	630	*9 140*	131	*0.29*
Stainless steel												
223-13685-1	TB.FITT.VA MAV10-S G 1/2	S	10	G 1/2	47	27	22	Stainless steel 1.4571	630	*9 140*	111	*0.24*

Connectors for pressure gauges MAVE

(Swivel with O-ring)

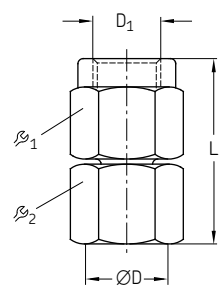

Order number	Designation	Series	Tube ØD	D1	L			Material	Operating pressure max.		Weight	
			mm	in	mm	mm	mm		bar	*psi*	g	*lb*
Steel, galvanized												
223-13655-1	TB.FITT.ST MAVE 6-L G 1/4 CF	L	6	G 1/4	35,5	19	14	Steel, galvanized	315	*4 570*	46	*0.10*
223-10889-2	TB.FITT.ST MAVE 8-L G 1/4 CF	L	8	G 1/4	35,5	19	17	Steel, galvanized	315	*4 570*	52	*0.11*
223-13655-7	TB.FITT.ST MAVE10-L G 1/4 CF	L	10	G 1/4	36,0	19	19	Steel, galvanized	315	*4 570*	59	*0.13*
223-14268-4	TB.FITT.ST MAVE12-L G 1/4 CF	L	12	G 1/4	36,0	19	22	Steel, galvanized	315	*4 570*	70	*0.15*
2230-00000116	TB.FITT.ST MAVE 6-S G 1/2 CF	S	6	G 1/2	42,5	27	17	Steel, galvanized	630	*9 140*	95	*0.21*
223-13655-2	TB.FITT.ST MAVE10-S G 1/2 CF	S	10	G 1/2	43,5	27	22	Steel, galvanized	630	*9 140*	109	*0.24*
223-13655-4	TB.FITT.ST MAVE12-S G 1/2 CF	S	12	G 1/2	45,0	27	24	Steel, galvanized	630	*9 140*	125	*0.28*
Stainless steel												
223-14268-7	TB.FITT.VA MAVE 6-L G 1/4	L	6	G 1/4	35,5	19	14	Stainless steel 1.4571	315	*4 570*	46	*0.10*

Double-edged cutting sleeve unions

L-connectors EL directionally adjustable

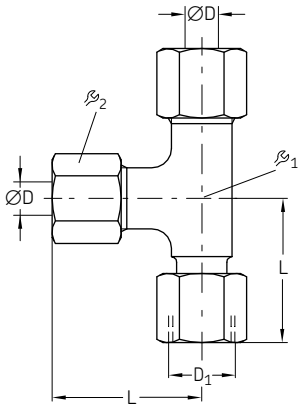

Order number	Designation	Series	Tube ØD	ØD1	L			Material	Operating pressure max.		Weight	
			mm	mm	mm	mm	mm		bar	*psi*	g	*lb*
Steel, galvanized												
223-14190-6	TB.STUD ST EL 6-L CF	L	6	M12×1,5	27	12	14	Steel, galvanized	500	*7 250*	68	*0.15*
223-14190-7	TB.STUD ST EL 8-L CF	L	8	M14×1,5	29	12	17	Steel, galvanized	500	*7 250*	87	*0.19*
223-13040-9	TB.STUD ST EL 10-L CF	L	10	M16×1,5	30	14	19	Steel, galvanized	500	*7 250*	110	*0.24*
223-13761-5	TB.STUD ST EL 12-L CF	L	12	M18×1,5	32	17	22	Steel, galvanized	400	*5 800*	151	*0.33*
223-14190-5	TB.STUD ST EL 15-L CF	L	15	M22×1,5	36	19	27	Steel, galvanized	400	*5 800*	245	*0.54*
443-418-181	TB.STUD ST EL 18-L CF	L	18	M26×1,5	40	24	32	Steel, galvanized	400	*5 800*	369	*0.81*
223-13040-3	TB.STUD ST EL 6-S CF	S	6	M14×1,5	31	12	17	Steel, galvanized	800	*11 600*	103	*0.23*
223-13040-7	TB.STUD ST EL 8-S CF	S	8	M16×1,5	32	14	19	Steel, galvanized	800	*11 600*	130	*0.29*
223-14190-2	TB.STUD ST EL 10-S CF	S	10	M18×1,5	34	17	22	Steel, galvanized	800	*11 600*	136	*0.30*
223-14190-4	TB.STUD ST EL 12-S CF	S	12	M20×1,5	38	17	24	Steel, galvanized	630	*9 140*	212	*0.47*
223-14190-1	TB.STUD ST EL 16-S CF	S	16	M24×1,5	43	24	30	Steel, galvanized	630	*9 140*	404	*0.89*
223-13761-7	TB.STUD ST EL 20-S CF	S	20	M30×2	48	27	36	Steel, galvanized	420	*6 090*	601	*1.33*
Stainless steel												
223-14244-8	TB.STUD VA EL 10-L	L	10	M16×1,5	30	14	19	Stainless steel 1.4571	315	*4 570*	110	*0.24*
223-14244-6	TB.STUD VA EL 20-S	S	20	M30×2	48	27	36	Stainless steel 1.4571	400	*5 800*	601	*1.33*

L-connectors EVL directionally adjustable

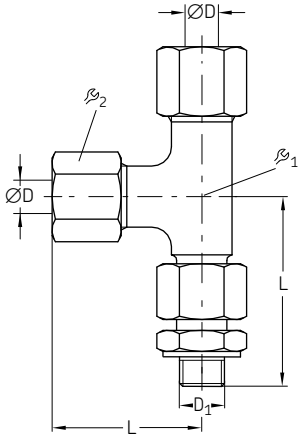

Order number	Designation	Series	Tube ØD	ØD1	L			Material	Operating pressure max.		Weight	
			mm	in	mm	mm	mm		bar	*psi*	g	*lb*
Steel, galvanized												
443-410-211	TB.FITT.ST EVL 10-S G3/8A CF	S	10	G 3/8	34	17	22	Steel, galvanized	630	*9 140*	226	*0.50*
443-410-161	TB.FITT.ST EVL 10-L G1/4A CF	L	10	G 1/4	30	14	19	Steel, galvanized	250	*3 625*	132	*0.29*

Double-edged cutting sleeve unions

Screw-in T-connectors TE, TH with metrical pipe thread

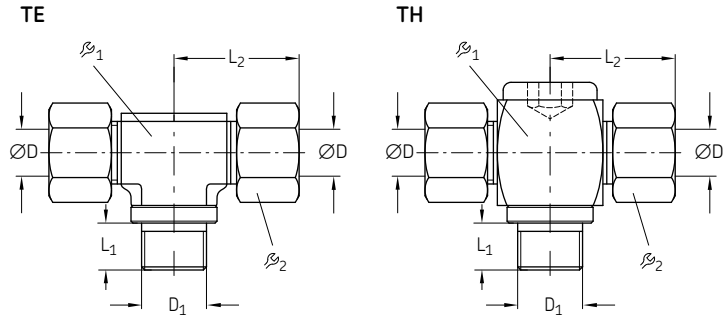

Order number	Designation	Series	Tube ØD	D_1	L_1	L_2	$\mathcal{S}_1$	$\mathcal{S}_2$	Material	Operating pressure max.		Weight	
			mm	mm	mm	mm	mm	mm		bar	*psi*	g	*lb*
96-6404-0058	TB.FITT.ST TE 4-LL M 8x1,0K CF	LL	4	M8×1 tap.	8	21	9	10	Steel, galvanized	100	*1 450*	19	*0.04*
96-6406-0058	TB.FITT.ST TE 6-LL M10x1,0K CF	LL	6	M10×1 tap.	8	21	11	12	Steel, galvanized	100	*1 450*	40	*0.09*
96-6408-0058	TB.FITT.ST TE 8-LL M10x1,0K CF	LL	8	M10×1 tap.	8	23	12	14	Steel, galvanized	100	*1 450*	30	*0.07*
96-0906-0058	TB.FITT.ST TE 6-L M10x1,0xK CF	L	6	M10×1 tap.	8	27	12	14	Steel, galvanized	250	*3 625*	50	*0.11*
445-910-551	TB.FITT.ST TE10-L M14x1,5K CF	L	10	M14×1,5 tap.	12	30	14	19	Steel, galvanized	250	*3 625*	100	*0.22*
96-1806-0058	TB.FITT.ST TE 6-S M12x1,5K CF	S	6	M12×1,5 tap.	12	31	14	17	Steel, galvanized	400	*5 800*	67	*0.15*
96-1808-0058	TB.FITT.ST TE 8-S M14x1,5K CF	S	8	M14×1,5 tap.	12	32	14	19	Steel, galvanized	400	*5 800*	100	*0.22*
445-735-101	TB.FITT.ST TH10-L M14x1,5K CF	L	10	M14×1,5	12	30	19	19	Steel, galvanized	315	*3 625*	154	*0.34*
445-739-152	TB.FITT.ST TH15-L M18x1,5K CF	L	15	M18×1,5	14	37	30	32	Steel, galvanized	250	*3 625*	352	*0.78*

Screw-in T-connectors TE, TH with Whitworth pipe thread

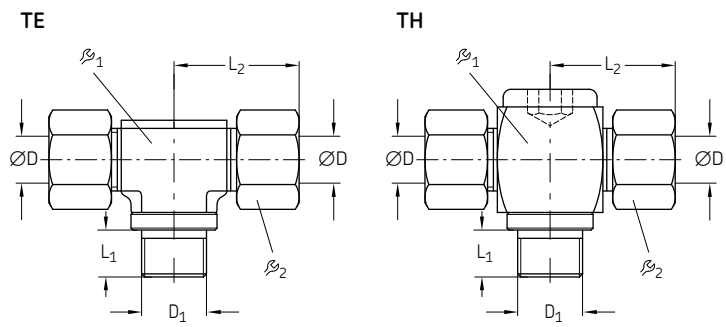

Order number	Designation	Series	Tube ØD	D_1	L_1	L_2	$\mathcal{S}_1$	$\mathcal{S}_2$	Material	Operating pressure max.		Weight	
			mm	in	mm	mm	mm	mm		bar	*psi*	g	*lb*
96-6304-0058	TB.FITT.ST TE 4-LL R 1/8K CF	LL	4	R 1/8	8	21	10	11	Steel, galvanized	100	*1 450*	14	*0.03*
96-6306-0058	TB.FITT.ST TE 6-LL R 1/8K CF	LL	6	R 1/8	8	21	11	12	Steel, galvanized	100	*1 450*	26	*0.06*
96-6308-0058	TB.FITT.ST TE 8-LL R 1/8K CF	LL	8	R 1/8	8	23	12	14	Steel, galvanized	100	*1 450*	32	*0.07*
96-0806-0058	TB.FITT.ST TE 6-L R 1/8K CF	L	6	R 1/8	8	27	12	14	Steel, galvanized	250	*3 625*	38	*0.08*
96-0808-0058	TB.FITT.ST TE 8-L R 1/4K CF	L	8	R 1/4	12	29	14	17	Steel, galvanized	250	*3 625*	75	*0.17*
96-0810-0058	TB.FITT.ST TE 10-L R 1/4K CF	L	10	R 1/4	12	30	14	19	Steel, galvanized	250	*3 625*	100	*0.22*
96-0818-0058	TB.FITT.ST TE 18-L R 1/2K CF	L	18	R 1/2	14	40	24	32	Steel, galvanized	250	*3 625*	149	*0.33*
96-1706-0058	TB.FITT.ST TE 6-S R 1/4K CF	S	6	R 1/4	12	31	12	17	Steel, galvanized	400	*5 800*	100	*0.22*
445-721-121	TB.FITT.ST TH12-L G 3/8A CF	L	12	G 3/8A	12	33	24	22	Steel, galvanized	315	*4 570*	249	*0.55*
445-713-152	TB.FITT.ST TH 15-L G 1/2A CF	L	15	G 1/2A	14	37	30	27	Steel, galvanized	315	*4 570*	415	*0.92*
445-717-221	TB.FITT.ST TH 22-L G 3/4A CF	L	22	G 3/4A	16	44	36	36	Steel, galvanized	160	*2 320*	763	*1.68*

Double-edged cutting sleeve unions

Swivel nut branch ET

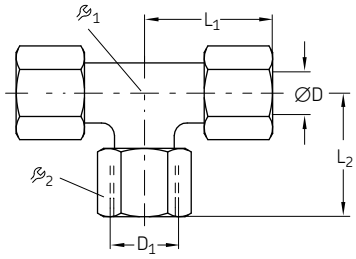

Order number	Designation	Series	Tube ØD	D_1	L_1	L_2			Material	Operating pressure max.		Weight	
			mm	mm	mm	mm	mm	mm		bar	*psi*	g	*lb*
223-14189-6	TB.STUD ST ET 6-L CF	L	6	M12×1,5	27	26	12	14	Steel, galvanized	500	*7 250*	68	*0.15*
223-13040-1	TB.STUD ST ET 8-L CF	L	8	M14×1,5	29	26,5	12	17	Steel, galvanized	500	*7 250*	87	*0.19*
223-14189-1	TB.STUD ST ET10-L CF	L	10	M16×1,5	30	29	14	19	Steel, galvanized	500	*7 250*	113	*0.25*
223-13785-8	TB.STUD ST ET12-L CF	L	12	M18×1,5	32	29,5	17	22	Steel, galvanized	400	*5 800*	153	*0.34*
223-14189-7	TB.STUD ST ET15-L CF	L	15	M22×1,5	36	32,5	19	27	Steel, galvanized	400	*5 800*	253	*0.56*
96-3118-0060	TB.STUD ST ET18-L CF	L	18	M26×1,5	40	35,5	24	32	Steel, galvanized	400	*5 800*	375	*0.83*
96-3122-0060	TB.STUD ST ET22-L CF	L	22	M30×1,5	44	38,5	27	36	Steel, galvanized	250	*3 625*	486	*1.07*
445-806-351	TB.STUD ST ET 6-S CF	S	6	M14×1,5	31	27	12	17	Steel, galvanized	800	*11 600*	101	*0.22*
223-10374-3	TB.STUD ST ET 8-S CF	S	8	M16×1,5	32	27,5	14	19	Steel, galvanized	800	*11 600*	135	*0.30*
223-14189-5	TB.STUD ST ET10-S CF	S	10	M18×1,5	34	30	17	22	Steel, galvanized	800	*11 600*	181	*0.40*
223-14189-9	TB.STUD ST ET12-S CF	S	12	M20×1,5	38	31	17	24	Steel, galvanized	630	*9 140*	212	*0.47*
223-14189-2	TB.STUD ST ET16-S CF	S	16	M24×1,5	43	36,5	24	30	Steel, galvanized	630	*9 140*	383	*0.84*
223-14189-3	TB.STUD ST ET20-S CF	S	20	M30×1,5	48	44,5	27	36	Steel, galvanized	420	*6 090*	614	*1.35*

Swivel nut elbow EW

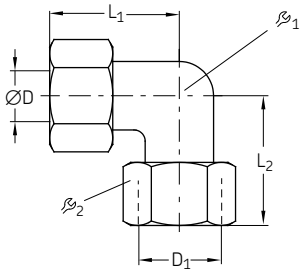

Order number	Designation	Series	Tube ØD	D_1	L_1	L_2			Material	Operating pressure max.		Weight	
			mm	mm	mm	mm	mm	mm		bar	*psi*	g	*lb*
223-14171-1	TB.STUD ST EW 6-L CF	L	6	M12×1,5	27	26	12	14	Steel, galvanized	500	*7 250*	46	*0.10*
223-14102-3	TB.STUD ST EW 8-L CF	L	8	M14×1,5	29	27,5	12	17	Steel, galvanized	500	*7 250*	59	*0.13*
443-306-343	TB.STUD ST EW 6-S CF	S	6	M14×1,5	31	27	12	17	Steel, galvanized	800	*11 600*	67	*0.15*
223-14171-8	TB.STUD ST EW10-S CF	S	10	M18×1,5	34	30	17	22	Steel, galvanized	800	*11 600*	126	*0.28*
223-14171-4	TB.STUD ST EW16-S CF	S	16	M24×1,5	43	36,5	24	30	Steel, galvanized	630	*9 140*	284	*0.63*
223-14171-5	TB.STUD ST EW20-S CF	S	20	M30×1,5	48	44,5	27	36	Steel, galvanized	420	*6 090*	422	*0.93*

Double-edged cutting sleeve unions

Swivels DVWE

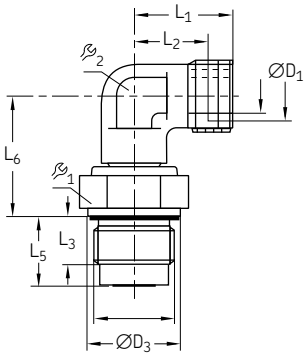

Order number	Designation	Tube Ø	Ø D_1	Series	Speed max.	Operation pressure max.		Material	Weight	
		mm	in		min^{-1}	bar	*psi*		g	*lb*
Steel galvanized										
223-13694-6	TB.FITT.ST DVWE10-L G 3/8A CF	10	G 3/8A	L	21	40	580	Steel galvanized	83	*0.18*
223-13694-1	TB.FITT.ST DVWE10-S G 3/8A CF	10	G 3/8A	S	9	100	1 450	Steel galvanized	103	*0.23*
Stainless steel										
223-13694-7	TB.FITT.VA DVWE10-L G 3/8A	10	G 3/8A	L	21	40	580	Stainless steel 1.4571	83	*0.18*
223-13694-3	TB.FITT.VA DVWE10-S G 3/8A	10	G 3/8A	S	9	100	1 450	Stainless steel 1.4404	103	*0.23*

Swivels DG

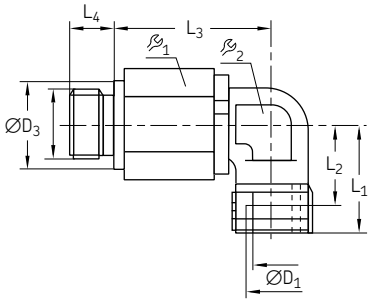

Order number	Designation	Tube Ø	Ø D_1	Series	Speed max.	Operation pressure max.		Material	Weight	
		mm	in		min^{-1}	bar	*psi*		g	*lb*
223-13665-7	TB.FITT.ST DG104/ 6-S G 1/4A CF	6	G 1/4A	S	400	100	1 450	Steel galvanized	131	*0.29*
223-13665-8	TB.FITT.ST DG104/ 8-S G 1/4A CF	8	G 1/4A	S	400	100	1 450	Steel galvanized	135	*0.30*
223-13665-9	TB.FITT.ST DG104/12-S G 3/8A CF	12	G 3/8A	S	200	100	1 450	Steel galvanized	284	*0.62*

Double-edged cutting sleeve unions

Blanking plug for cones BUZ

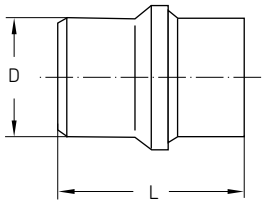

Order number	Designation	Series	D	L	Material	Operating pressure max.		Weight	
			mm	mm		bar	*psi*	g	*lb*
Steel galvanized									
223-13640-1	PLUG ST BUZ 6-L/S CF	L/S	6	19,5	Steel, galvanized	*315*	4 570	*5*	*0.01*
223-13640-5	PLUG ST BUZ 8-L/S CF	L/S	8	19,5	Steel, galvanized	*315*	4 570	*8*	*0.02*
223-13640-3	PLUG ST BUZ10 -L/S CF	L/S	10	21,0	Steel, galvanized	*315*	4 570	*13*	*0.03*
223-13640-4	PLUG ST BUZ12 -L/S CF	L/S	12	21,8	Steel, galvanized	*315*	4 570	*20*	*0.04*
223-13640-8	PLUG ST BUZ16 -S CF	S	16	25,5	Steel, galvanized	*400*	5 800	*39*	*0.09*
223-13640-2	PLUG ST BUZ20 -S CF	S	20	30,5	Steel, galvanized	*400*	5 800	*73*	*0.16*
Stainless steel									
223-14215-5	PLUG VA BUZ 6-L/S	L/S	6	19,5	Stainless steel 1.4571	*315*	4 570	*5*	*0.01*
223-14215-3	PLUG VA BUZ10 -L/S	L/S	10	21,0	Stainless steel 1.4571	*315*	4 570	*13*	*0.03*
223-14215-2	PLUG VA BUZ12 -L/S	L/S	12	21,8	Stainless steel 1.4571	*315*	4 570	*20*	*0.04*
223-13640-9	PLUG VA BUZ18 -L	L	18	24,0	Stainless steel 1.4571	*315*	4 570	*45*	*0.10*
223-14215-4	PLUG VA BUZ20 -S	S	20	30,5	Stainless steel 1.4571	*400*	5 800	*73*	*0.16*

Soft-seal cutting sleeve union (SSCS)

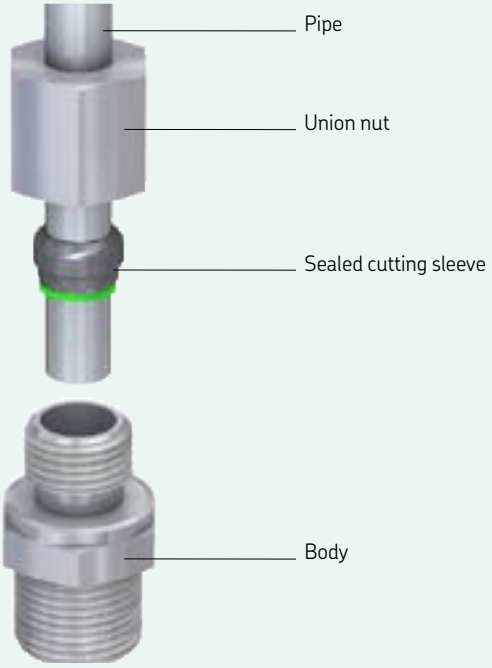

Description

Soft-seal cutting sleeve unions (SSCS) consist of a union nut, a cutting sleeve, a support ring with soft seal, and a body with another soft seal. To mount the union, the union nut and the sealed cutting sleeve have to be put on the pipe end. All parts must be aligned as shown on the illustration above. Then the pipe end can be pushed into the body before tightening the union nut. During that process, the sealed cutting sleeve cuts into the pipe to seal the connection as shown in the illustration above. In addition, the union also is sealed by the soft seal.

Features and benefits

- Compact installation dimensions
- Virtually leakage-free, high-pressure union
- Recommended for high-pressure oil and grease applications
- Common fitting system for high-pressure systems
- Higher nominal pressures than DECS unions (series “L” can often be used instead of “S”)
- High sealing capacity, especially with low-viscosity media (e.g. no sweating with low-viscosity oils)
- Easy assembly by tightening the union nut to the stop (no risk of under- or over-assembly)
- Pipe vibration dampening resulting from pipe fixation during assembly (caused by SSCS union)
- Wide operating temperature range from -25 to 80 °C
- Tightening forces 25% lower than TECS unions

Soft-seal cutting sleeve union

Straight screw-in connectors GE

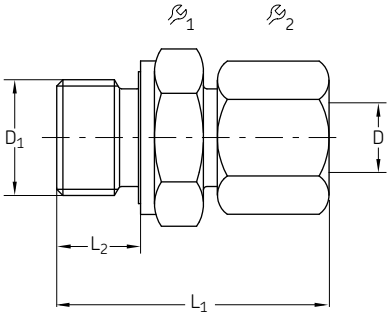

Order number	Designation	Series	Tube ØD	ØD1	L	L1			Material	Operating pressure max.		Weight	
			mm		mm	mm	mm	mm		bar	*psi*	g	*lb*
471-004-191	TB.FITT.ST GE 4-LL G 1/8A-ED CF	LL	4	G 1/8A	19	6,5	14	10	Steel galv.	100	*1 450*	15	*0.03*
471-004-311	TB.FITT.ST GE 4-LL M 10x1,0-ED CF	LL	4	M10x1	26	8	10	10	Steel galv.	100	*1 450*	15	*0.03*
471-006-192	TB.FITT.ST GE 6-L G 1/8A-ED CF	L	6	G 1/8A	23	8	14	14	Steel galv.	500	*7 250*	25	*0.06*
471-006-161	TB.FITT.ST GE 6-L G 1/4A-ED CF	L	6	G 1/4A	25	12	19	14	Steel galv.	500	*7 250*	40	*0.09*
471-006-311	TB.FITT.ST GE 6-L M 10x1,0-ED CF	L	6	M10x1	23	8	14	14	Steel galv.	500	*7 250*	25	*0.06*
471-006-351	TB.FITT.ST GE 6-L M 14x1,5-ED CF	L	6	M14x1,5	27	12	14	14	Steel galv.	400	*5 800*	44	*0.10*
471-008-130	TB.FITT.ST GE 8-L G 1/8A-ED CF	L	8	G 1/8A	24	8	14	17	Steel galv.	500	*7 250*	33	*0.07*
471-008-161	TB.FITT.ST GE 8-L G 1/4A-ED CF	L	8	G 1/4A	25	12	19	17	Steel galv.	500	*7 250*	44	*0.10*
471-008-131	TB.FITT.ST GE 8-L G 1/2A-ED CF	L	8	G 1/2A	27	14	27	17	Steel galv.	400	*5 800*	90	*0.20*
471-008-211	TB.FITT.ST GE 8-L G 3/8A-ED CF	L	8	G 3/8A	26	12	22	17	Steel galv.	400	*5 800*	60	*0.13*
471-008-314	TB.FITT.ST GE 8-L M 10x1,0-ED CF	L	8	M 10x1	34	7	17	14	Steel galv.	45	*650*	40	*0.09*
471-008-345	TB.FITT.ST GE 8-L M 12x1,5-ED CF	L	8	M12x1,5	25	12	17	17	Steel galv.	500	*7 250*	37	*0.08*
471-008-351	TB.FITT.ST GE 8-L M 14x1,5-ED CF	L	8	M14x1,5	30	12	19	17	Steel galv.	400	*5 800*	50	*0.11*
471-008-391	TB.FITT.ST GE 8-L M 18x1,5-ED CF	L	8	M18x1,5	38	11	24	17	Steel galv.	400	*5 800*	70	*0.15*
471-010-161	TB.FITT.ST GE 10-L G 1/4A-ED CF	L	10	G 1/4A	26	12	19	19	Steel galv.	500	*7 250*	50	*0.11*
471-010-211	TB.FITT.ST GE 10-L G 3/8A-ED CF	L	10	G 3/8A	27	12	22	22	Steel galv.	400	*5 800*	60	*0.13*
471-010-312	TB.FITT.ST GE 10-L M 10x1,0-ED CF	L	10	M10x1	32	8	19	17	Steel galv.	500	*7 250*	43	*0.09*
471-010-351	TB.FITT.ST GE 10-L M 14x1,5-ED CF	L	10	M14x1,5	26	12	19	19	Steel galv.	500	*7 250*	50	*0.11*
471-010-391	TB.FITT.ST GE 10-L M 18x1,5-ED CF	L	10	M18x1,5	27	12	24	19	Steel galv.	400	*5 800*	75	*0.17*
471-012-161	TB.FITT.ST GE 12-L G 1/4A-ED CF	L	12	G 1/4A	27	12	19	22	Steel galv.	400	*5 800*	58	*0.13*
471-012-211	TB.FITT.ST GE 12-L G 3/8A-ED CF	L	12	G 3/8A	27	12	22	22	Steel galv.	400	*5 800*	73	*0.16*
471-012-391	TB.FITT.ST GE 12-L M 18x1,5-ED CF	L	12	M18x1,5	27	12	24	22	Steel galv.	400	*5 800*	120	*0.26*

Cone plugs VKA

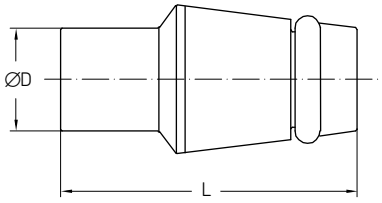

Order number	Designation	Series	Tube ØD	L	Material	Operating pressure max.		Weight	
			mm	mm		bar	*psi*	g	*lb*
Steel galvanized									
223-10297-5	BLANKING PLUG ST VKA 6-L/S CF	L/S	6	18,5	Steel galvanized	800	*11 600*	6	*0.01*
460-708-001	BLANKING PLUG ST VKA 8-L CF	L	8	18,5	Steel galvanized	500	*7 250*	9	*0.02*
223-10297-6	BLANKING PLUG ST VKA10-L/S CF	L/S	10	15	Steel galvanized	800	*11 600*	15	*0.03*
223-10297-7	BLANKING PLUG ST VKA20-S CF	S	20	28,5	Steel galvanized	420	*6 090*	78	*0.17*
223-14241-2	BLANKING PLUG ST VKA30-S CF	S	30	30,5	Steel galvanized	420	*6 090*	180	*0.40*
Stainless steel									
223-14241-9	BLANKING PLUG VA VKA10-L/S	L/S	10	15	Stainless steel 1.4571	630	*9 140*	15	*0.03*
223-14241-5	BLANKING PLUG VA VKA30-S	S	30	30.5	Stainless steel 1.4571	400	*5 800*	180	*0.40*

Soft-seal cutting sleeve union

Straight screw-in connectors with shortened thread and function nut GE (short)

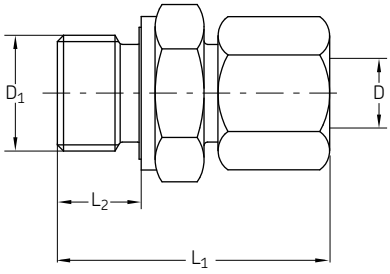

Order number	Designation	Series	Tube ØD	ØD1	L1	L2	1	2	Material	Operating pressure max.		Weight	
			mm	mm	mm	mm	mm	mm		bar	*psi*	g	*lb*
471-006-320	TB.FITT.ST GE 6-LL M10x1,0-ED CF SHORT	LL	6	M10x1	31	7	14	14	Steel galv.	100	*1 450*	27	*0.06*
471-006-319	TB.FITT.ST GE 6-LL M12x1,0-ED CF SHORT	LL	6	M12x1	31	7	14	19	Steel galv.	100	*1 450*	40	*0.09*
471-008-132	TB.FITT.ST GE 8-LL M10x1,0-ED CF SHORT	LL	8	M10x1	34	7	17	14	Steel galv.	100	*1 450*	35	*0.08*
471-008-318	TB.FITT.ST GE 8-LL M12x1,0-ED CF SHORT	LL	8	M12x1	32	7	17	19	Steel galv.	100	*1 450*	70	*0.15*
471-010-312	TB.FITT.ST GE10-LL M10x1,0-ED CF SHORT	LL	10	M10x1	32	7	19	17	Steel galv.	100	*1 450*	43	*0.09*
471-010-318	TB.FITT.ST GE10-LL M12x1,0-ED CF SHORT	LL	10	M12x1	34	7	19	19	Steel galv.	100	*1 450*	45	*0.10*
471-012-312	TB.FITT.ST GE12-LL M10x1,0-ED CF SHORT	LL	12	M10x1	36	7	22	22	Steel galv.	100	*1 450*	57	*0.13*

Straight bulkhead connectors with function nut SVZ

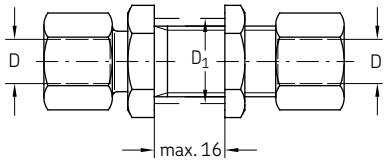

Order number	Designation	Series	Tube ØD	D1	L1	L2	1	2	3	Material	Operating pressure max.		Weight	
			mm	mm	mm	mm	mm	mm	mm		bar	*psi*	g	*lb*
474-606-331	TB.FITT.ST SV 6-L CF	L	6	12,5	22	42	17	17	14	Steel galv.	500	*7 250*	61	*0.13*
474-608-351	TB.FITT.ST SV 8-L CF	L	8	14,5	23	42	19	19	17	Steel galv.	500	*7 250*	83	*0.18*
474-610-351	TB.FITT.ST SV10-L CF	L	10	16,5	25	43	22	22	19	Steel galv.	500	*7 250*	100	*0.22*
474-612-391	TB.FITT.ST SV12-L CF	L	12	18,5	25	44	24	24	22	Steel galv.	400	*5 800*	134	*0.30*
474-615-431	TB.FITT.ST SV15-L CF	L	15	22,5	27	46	27	30	27	Steel galv.	400	*5 800*	224	*0.49*
474-618-441	TB.FITT.ST SV18-L CF	L	18	26,5	30	49	32	36	32	Steel galv.	400	*5 800*	344	*0.76*

Soft-seal cutting sleeve union

Straight connectors (tube to tube) with function nut GZ

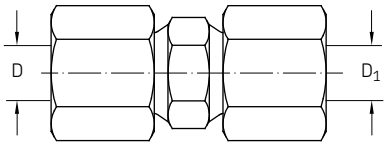

Order number	Designation	Series	Tube ØD	L		Material	Operating pressure max.		Weight	
			mm	mm	mm		bar	*psi*	g	*lb*
474-506-061	TB.FITT.ST G 6Z-L CF	L	6	39	14	Steel galvanized	500	*7 250*	35	*0.08*
474-508-081	TB.FITT.ST G 8Z-L CF	L	8	40	17	Steel galvanized	500	*7 250*	50	*0.11*
474-510-101	TB.FITT.ST G10Z-L CF	L	10	42	19	Steel galvanized	500	*7 250*	64	*0.14*
474-512-121	TB.FITT.ST G12Z-L CF	L	12	43	22	Steel galvanized	400	*5 800*	87	*0.19*
474-515-151	TB.FITT.ST G15Z-L CF	L	15	46	27	Steel galvanized	400	*5 800*	144	*0.32*
474-518-181	TB.FITT.ST G18Z-L CF	L	18	48	32	Steel galvanized	400	*5 800*	200	*0.44*

T-connectors with function nut TZ

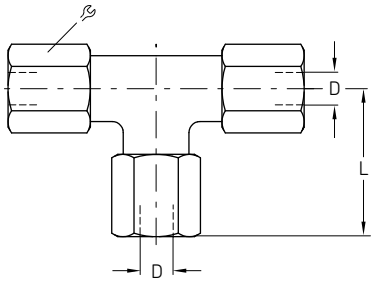

Order number	Designation	Series	Tube ØD	L		Material	Operating pressure max.		Weight	
			mm	mm	mm		bar	*psi*	g	*lb*
476-006-001	TB.FITT.ST T 6Z-L CF	L	6	27	14	Steel galvanized	500	*7 250*	70	*0.15*
476-008-001	TB.FITT.ST T 8Z-L CF	L	8	29	17	Steel galvanized	500	*7 250*	90	*0.20*
476-010-001	TB.FITT.ST T10Z-L CF	L	10	30	19	Steel galvanized	500	*7 250*	114	*0.25*
476-012-001	TB.FITT.ST T12Z-L CF	L	12	32	22	Steel galvanized	400	*5 800*	153	*0.34*
476-015-001	TB.FITT.ST T15Z-L CF	L	15	36	27	Steel galvanized	400	*5 800*	241	*0.53*

Adapters, plugs and washers

Description

Adapter fittings are used where no standard fittings are available or may require too much space. In fact, adapter fittings are not an ideal solution due to the risk of an additional leakage point in the system. Therefore, the adapter fitting sealing, material, design and operation pressure must be considered during the selection process. SKF offers adapters for various applications with suitable operating pressures, fittings, seals and designs.

Adapter fittings, plugs and washers are available in various designs to serve different application requirements for system pressure:

- 45 bar designs
- 350 bar designs
- LL (very light, max. 100 bar)
- L (light, max. 500 bar)
- S (heavy, max. 800 bar)

Features and benefits

- Fast and virtually leakage-free connection
- Designs for almost every application
- Space-saving small design

Applications

- Food and beverage industry
- Renewable energy industry
- Construction machinery
- Material handling
- On-road vehicles
- Machine tools
- Etc.

Adapter fittings

Reducing connectors with cylindrical thread for operating pressures up to 45 bar (sealed by flat washer acc. to DIN 7603)

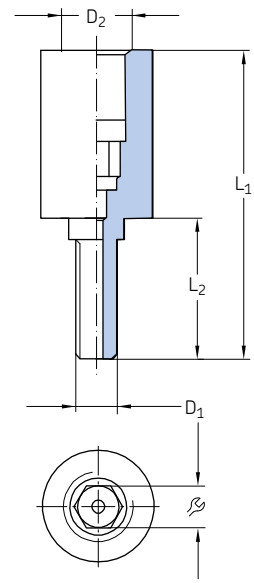

Order number	Designation	D_1	D_2	L_1	L_2		Material	Weight	
		mm	mm	mm	mm	mm		g	*lb*
843-130-021	ADAPTER ST M 3Ax M 5I CF	M3	M5	22	10	3 [1]	Steel, galvanized surface	4	*0.01*
843-130-022	ADAPTER ST M 4Ax M 5I CF	M4	M5	22	10	3 [1]	Steel, galvanized surface	5	*0.01*
843-130-023	ADAPTER ST M 5Ax M 5I CF	M5	M5	22	10	3 [1]	Steel, galvanized surface	11	*0.02*

[1] Female thread

Reducing connectors with tapered thread for operating pressures up to 45 bar

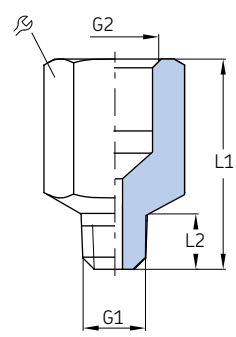

Order number	Designation	G_1	G_2	L_1	L_2		Material	Weight	
		mm	in	mm	mm	mm		g	*lb*
406-044-S1	ADAPTER ST M10x1AKx R1/4I CF	M10×1 tap.	R 1/4	22,5	8	17	Steel, galvanized surface	20	*0.04*

Adapter fittings

Reducing connectors with cylindrical thread for operating pressures up to 45 bar (sealed by flat washer acc. to DIN 7603)

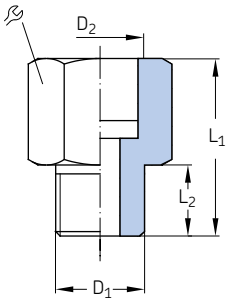

Order number	Designation	D_1	D_2	L_1	L_2		Material	Weight	
			in	mm	mm	mm		g	*lb*
Steel, galvanized surface									
401-013-161	ADAPTER ST G1/4Ax G1/2 CF	G 1/4 A	G 1/2	40	12	27	Steel, galvanized	114	*0.25*
401-011-132	ADAPTER ST G1/2Ax G1 CF	G 1/2 A	G 1	49	14	41	Steel, galvanized	222	*0.49*
401-013-171	ADAPTER ST G1/4Ax G1/2 CF	G 3/4 A	G 1/2	41	16	32	Steel, galvanized	140	*0.31*
P-78.01	ADAPTER ST M12x1Ax G1/4 CF	M12×1	G 1/4	27	8,5	19	Steel, galvanized	31	*0.07*
401-016-371	ADAPTER ST M16x1,5Ax G1/4 CF	M16×1.5	G 1/4	30	12	19	Steel, galvanized	39	*0.09*
243-001.10	ADAPTER ST M16x1,5Ax G1/2 CF	M16×1.5	G 1/2	31	9	27	Steel, galvanized	60	*0.13*
267-001.36	ADAPTER ST M18x1,5Ax G3/8 CF	M18×1.5	G 3/8	32	10	22	Steel, galvanized	50	*0.11*
243-001.20	ADAPTER ST M18x1,5Ax G1/2 CF	M18×1.5	G 1/2	32	10	27	Steel, galvanized	59	*0.13*
44-1755-2029	ADAPTER ST M20x1,5Ax G1/4 CF	M20×1.5	G 1/4	28	12	24	Steel, galvanized	59	*0.13*
Brass									
267-001.47	ADAPTER MS G3/8Ax G3/4	G 3/8 A	G 1/4	31	10	22	Brass	60	*0.13*
267-001.60	ADAPTER MS G3/8Ax G1/2	G 3/8 A	G 1/2	34	10	27	Brass	78	*0.17*
401-019-132	ADAPTER MS G1/2Ax G1/8	G 1/2 A	G 1/8	24	12	27	Brass	22	*0.05*
DZ333	ADAPTER MS G1/2Ax G1/4	G 1/2 A	G 1/4	24	12	27	Brass	64	*0.14*
401-013-131	ADAPTER MS G1/2Ax G1/2	G 1/2 A	G 1/2	40,5	12	27	Brass	107	*0.24*
DZ334	ADAPTER MS G1/2Ax G3/8	G 1/2 A	G 3/8	31	12	27	Brass	83	*0.18*
267-001.03	ADAPTER MS G1/2Ax G3/4	G 1/2 A	G 3/4	40	12	36	Brass	166	*0.37*
406-024	ADAPTER MS M10x1Ax G1/8	M10×1	G 1/8	20	8	14	Brass	15	*0.03*
401-016-312	ADAPTER MS M10x1Ax G1/4	M10×1	G 1/4	26,5	7,5	17	Brass	25	*0.06*
401-019-352	ADAPTER MS M14x1,5Ax G1/8	M14×1.5	G 1/8	20	9	17	Brass	24	*0.05*

Adapter for pressure gauges for operating pressures up to 45 bar (sealed by flat washer acc. to DIN 7603)

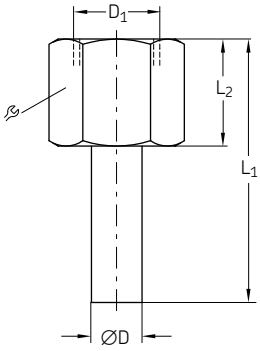

Order number	Designation	Series	Tube ØD	D_1	L_1	L_2		Material	Operating pressure max.		Weight	
			mm	in	mm	mm	mm		bar	*psi*	g	*lb*
248-610.01	ADAPTER MS D 6AxG 1/4	L	6	G 1/4	46	22	17	Brass	45	*650*	30	*0.07*

Adapter fittings

Adapter for pressure gauges with cylindrical thread for operating pressures up to 45 bar

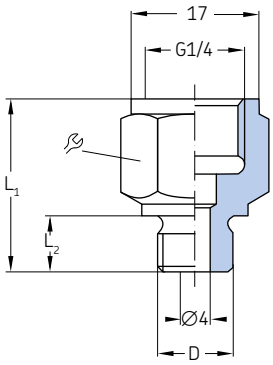

Order number	Designation	D	L_1	L_2		Material	Weight	
		mm	mm	mm	mm		g	*lb*
301-134	CONNECTING PIECE ST - M10×1 ZN	M10×1	23	7,5	17	Steel, galvanized	20	*0.044*
301-034	CONNECTING PIECE ST - M14×1,5 ZN	M14×1,5	22	9	17	Steel, galvanized	20	*0.044*

Reducing connectors with tapered thread for operating pressures up to 350 bar

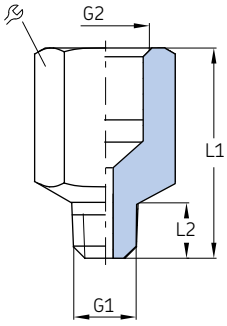

Order number	Designation	G_1	G_2	L_1	L_2		Material	Weight	
				mm	mm	mm		g	*lb*
304-19230-1	ADAPTER R1/8 AxM10x1,0 I CF	R1/8	M10×1	18	6	13	Steel, galvanized	20	*0.04*
304-19787-1	ADAPTER M 8X1,0 IXM 6X1,0KA CF	M 6×1K	M 8×1	20	6	10	Steel, galvanized	6	*0.01*
304-19437-1	ADAPTER M 8x1,0KAxM 8x1,0 I CF	M 8×1K	M 8×1	16	5	10	Steel, galvanized	5	*0.01*
304-19548-1	ADAPTER M 8x1,25KAxM 8x1,0 I CF	M 8×1,25K	M 8×1	20	8	12	Steel, galvanized	10	*0,02*
304-19167-1	ADAPTER M 8x1,0KAxG1/8 I CF	M 8×1K	G1/8	17	5	13	Steel, galvanized	10	*0.02*
304-19509-1	ADAPTER M10x1,0KAxM10x1,0 I CF	M10×1K	M10×1	18	6,5	13	Steel, galvanized	9	*0.02*
304-16337-1	ADAPTER M10x1 IxM12x1K A CF	M12×1K	M10×1	18	8	17	Steel, galvanized	15	*0.03*

Adapter fittings

Elbow reducing connectors 45° with tapered thread for operating pressures up to 350 bar

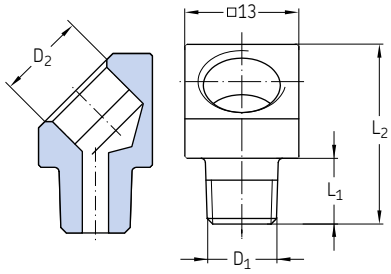

Order number	Designation	D_1	D_2	L_1	L_2	Material	Weight	
				mm	mm		g	*lb*
432-70673-1	ELBOW FITT.ST 45DEGREE R1/8A xG1/8 CF	R 1/8	G 1/8	6	20	Steel, galvanized	10	*0.02*
406-155K	ELBOW FITT.ST 45DEGREE R1/8AxM10x1I CF	R 1/8	M10×1	7,5	20,5	Steel, galvanized	13	*0.03*
406-165K	ELBOW FITT.ST 45DEGREE R1/8AxG1/8 CF	R 1/8	G 1/8	7,5	20,5	Steel, galvanized	13	*0.03*
432-24050-1	ELBOW FITT.ST 45DEGREE M8x1AKxM8x1I CF	M8x1 tap.	M8x1	5	20	Steel, galvanized	11	*0.02*
432-71483-1	ELBOW FITT.ST 45DEGREE M8x1AKxM10x1I CF	M8x1 tap.	M10x1	5	20	Steel, galvanized	11	*0.02*
406-145K	ELBOW FITT.ST 45DEGREE M8x1AKxM10x1I CF	M8×1 tap.	M10×1	7,5	21	Steel, galvanized	11	*0.02*
406-045K	ELBOW FITT.ST 45DEGREE M10x1AKxM10x1I CF	M10×1 tap.	M10×1	7,5	21	Steel, galvanized	12	*0.03*
432-24051-1	ELBOW FITT.ST 45DEGREE M10x1AKxM8x1I CF	M10x1 tap.	M8x1	5	20	Steel, galvanized	12	*0.03*

Elbow reducing connectors 90° with tapered thread for operating pressures up to 350 bar

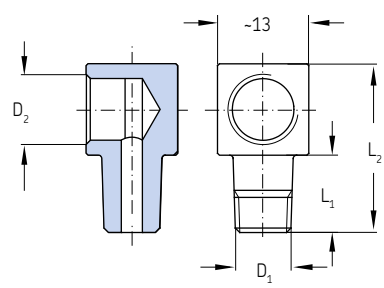

Order number	Designation	D_1	D_2	L_1	L_2	Material	Weight	
				mm	mm		g	*lb*
432-70674-1	ELBOW FITT.ST 90DEGREE G1/8xR1/8A CF	R 1/8	G 1/8	9	22.5	Steel, galvanized	16	*0.04*
406-091K	ELBOW FITT.ST 90DEGREE R1/8AxG1/8 CF	R 1/8	G 1/8	11	24	Steel, galvanized	20	*0.04*
406-093K	ELBOW FITT.ST 90DEGREE R1/8AxM10x1I CF	R 1/8	M10×1	11	24	Steel, galvanized	16	*0.04*
406-094K	ELBOW FITT.ST 90DE.M8x1,25AKxM8x1,25I CF	M8×1.25 tap.	M8×1.25	11	24	Steel, galvanized	11	*0.02*
406-089K	ELBOW FITT.ST 90DEGREE M8x1AKxM10x1I CF	M8×1 tap.	M10×1	11	24	Steel, galvanized	15	*0.03*
406-090K	ELBOW FITT.ST 90DEGREE M10x1AKxM10x1I CF	M10×1 tap.	M10×1	11	24	Steel, galvanized	16	*0.04*
406-092K	ELBOW FITT.ST 90DEGREE M10x1AKxM10x1I CF	M10×1 tap.	M10×1	17	30	Steel, galvanized	20	*0.04*
432-24043-1	ELBOW FITT.ST 90DEGREE M8x1AKxM8x1I CF	M8x1 tap.	M8x1	5	20	Steel, galvanized	12	*0.03*
432-24052-1	ELBOW FITT.ST 90DEGREE M10x1AKxM8x1I CF	M10x1 tap.	M8x1	5	20	Steel, galvanized	14	*0.03*

Adapter fittings

Reducing connectors RI with cylindrical thread for operating pressures up to 400 bar

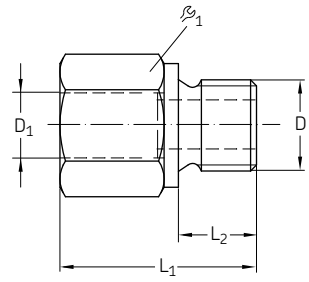

Order number	Designation	Tube ØD	ØD1	L1	L2		Material	Operating pressure max.		Weight	
		in	in	mm	mm	mm		bar	*psi*	g	*lb*
Steel galvanized											
222-12578-5	BUSHING ST RI G 1/8AxG 1/4 CF	G 1/8A	G 1/4	31	8	19	Steel galvanized	400	*5 800*	42	*0.09*
222-12521-5	BUSHING ST RI G 1/4AxG 1/8 CF	G 1/4A	G 1/8	28	12	19	Steel galvanized	400	*5 800*	38	*0.08*
222-12521-6	BUSHING ST RI G 1/4AxG 3/8 CF	G 1/4A	G 3/8	36	12	24	Steel galvanized	400	*5 800*	69	*0.15*
222-12521-4	BUSHING ST RI G 1/4AxG 1/2 CF	G 1/4A	G 1/2	40	12	30	Steel galvanized	400	*5 800*	116	*0.26*
222-13678-2	BUSHING ST RI G 3/8AxG 1/8 CF	G 3/8A	G 1/8	22.5	12	22	Steel galvanized	400	*5 800*	39	*0.09*
222-12578-4	BUSHING ST RI G 3/8AxG 1/4 CF	G 3/8A	G 1/4	36	12	22	Steel galvanized	400	*5 800*	68	*0.15*
222-12578-8	BUSHING ST RI G 3/8AxG 1/2 CF	G 3/8A	G 1/2	41	12	30	Steel galvanized	400	*5 800*	125	*0.28*
222-12578-3	BUSHING ST RI G 3/8AxG 3/4 CF	G 3/8A	G 3/4	44	12	36	Steel galvanized	315	*4 570*	183	*0.40*
222-12521-2	BUSHING ST RI G 1/2AxG 1/4 CF	G 1/2A	G 1/4	24	14	27	Steel galvanized	315	*4 570*	56	*0.12*
96-3102-0058	BUSHING ST RI G 1/2AxG 1/8 CF	G 1/2A	G 1/8	24	14	27	Steel galvanized	400	*5 800*	66	*0.15*
222-12599-2	BUSHING ST RI G 1/2AxG 3/8 CF	G 1/2A	G 3/8	36	14	27	Steel galvanized	315	*4 570*	94	*0.21*
222-12047-2	BUSHING ST RI G 1/2AxG 3/4 CF	G 1/2A	G 3/4	46	14	36	Steel galvanized	315	*4 570*	182	*0.40*
222-12599-3	BUSHING ST RI G 1/2AxG 1 CF	G 1/2A	G 1	49	14	41	Steel galvanized	315	*4 570*	221	*0.49*
222-13678-1	BUSHING ST RI G 3/4AxG 1/4 CF	G 3/4A	G 1/4	26	16	32	Steel galvanized	315	*4 570*	103	*0.23*
222-12578-9	BUSHING ST RI G 3/4AxG 3/8 CF	G 3/4A	G 3/8	26	16	32	Steel galvanized	315	*4 570*	87	*0.19*
222-12047-8	BUSHING ST RI G 3/4AxG 1/2 CF	G 3/4A	G 1/2	41	16	32	Steel galvanized	315	*4 570*	143	*0.32*
222-12047-4	BUSHING ST RI G 3/4AxG 1 CF	G 3/4A	G 1	51	16	41	Steel galvanized	315	*4 570*	235	*0.52*
96-3129-0058	BUSHING ST RI G 3/4AxG 1-1/4 CF	G 3/4A	G 1 1/4	55	16	55	Steel galvanized	160	*2 320*	481	*1.06*
222-12599-9	BUSHING ST RI G 1AxG 1/2 CF	G 1A	G 1/2	29	18	41	Steel galvanized	315	*4 570*	157	*0.35*
222-13678-4	BUSHING ST RI G 1AxG 3/8 CF	G 1A	G 3/8	29	18	41	Steel galvanized	315	*4 570*	179	*0.39*
96-3106-0058	BUSHING ST RI G 1AxG 1/4 CF	G 1A	G 1/4	29	18	41	Steel galvanized	315	*4 570*	195	*0.43*
222-12599-5	BUSHING ST RI G 1AxG 3/4 CF	G 1A	G 3/4	47	18	41	Steel galvanized	315	*4 570*	278	*0.61*
222-13670-1	BUSHING ST RI G 1AxG 1-1/4 CF	G 1A	G 1 1/4	57	18	55	Steel galvanized	160	*2 320*	530	*1.17*
96-3133-0058	BUSHING ST RI G 1AxG 1-1/2 CF	G 1A	G 1 1/2	59	18	60	Steel galvanized	160	*2 320*	585	*1.29*
222-13678-8	BUSHING ST RI G 1-1/4AxG 1/2 CF	G 1 1/4A	G 1/2	32	20	50	Steel galvanized	160	*2 320*	308	*0.68*
222-12521-8	BUSHING ST RI G 1-1/4AxG 3/4 CF	G 1 1/4A	G 3/4	32	20	50	Steel galvanized	160	*2 320*	267	*0.59*
222-12599-6	BUSHING ST RI G 1-1/4AxG 1 CF	G 1 1/4A	G 1	32	20	50	Steel galvanized	160	*2 320*	458	*1.01*
96-3112-0058	BUSHING ST RI G 1-1/2AxG 3/4 CF	G 1 1/2A	G 3/4	36	22	55	Steel galvanized	160	*2 320*	402	*0.89*
222-13678-3	BUSHING ST RI G 1-1/2AxG 1 CF	G 1 1/2A	G 1	36	22	55	Steel galvanized	160	*2 320*	337	*0.74*
96-3136-0058	BUSHING ST RI G 1-1/2AxG 1-1/4 CF	G 1 1/2A	G 1 1/4	58	22	55	Steel galvanized	160	*2 320*	542	*1.20*
96-3137-0058	BUSHING ST RI G 2AxG 1-1/2 CF	G 2A	G 1 1/2	62	24	70	Steel galvanized	160	*2 320*	990	*2.18*
Stainless steel											
222-13618-1	BUSHING VA RI G 1/8AxG 1/4	G 1/8A	G 1/4	31	8	19	Stainless steel 1.4571	400	*5 800*	42	*0.09*
222-10365-3	BUSHING VA RI G 1/4AxG 1/8	G 1/4A	G 1/8	28	12	19	Stainless steel 1.4571	400	*5 800*	38	*0.08*
222-13618-5	BUSHING VA RI G 1/4AxG 1/2	G 1/4A	G 1/2	40	12	30	Stainless steel 1.4571	400	*5 800*	116	*0.26*
222-14180-7	BUSHING VA RI G 3/8AxG 1/4	G 3/8A	G 1/4	36	12	22	Stainless steel 1.4571	400	*5 800*	68	*0.15*
222-13618-2	BUSHING VA RI G 3/8AxG 1/2	G 3/8A	G 1/2	41	12	30	Stainless steel 1.4571	400	*5 800*	125	*0.28*
222-14180-3	BUSHING VA RI G 1/2AxG 1/4	G 1/2A	G 1/4	24	14	27	Stainless steel 1.4571	315	*4 570*	56	*0.12*
222-14180-6	BUSHING VA RI G 1/2AxG 3/8	G 1/2A	G 3/8	36	14	27	Stainless steel 1.4571	315	*4 570*	94	*0.21*
222-14180-9	BUSHING VA RI G 3/4AxG 3/8	G 3/4A	G 3/8	26	16	32	Stainless steel 1.4571	315	*4 570*	87	*0.19*
222-13618-3	BUSHING VA RI G 3/4AxG 1/2	G 3/4A	G 1/2	41	16	32	Stainless steel 1.4571	315	*4 570*	143	*0.32*
222-14180-5	BUSHING VA RI G 1AxG 3/4	G 1A	G 3/4	47	18	41	Stainless steel 1.4571	315	*4 570*	278	*0.61*

Adapter fittings

Banjo fittings, rotatable

91308

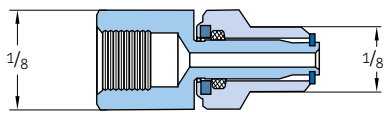

223-12567-1

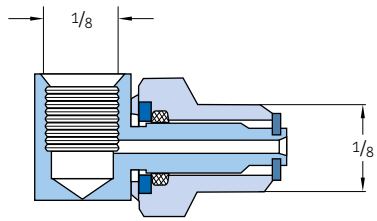

626-25702-1

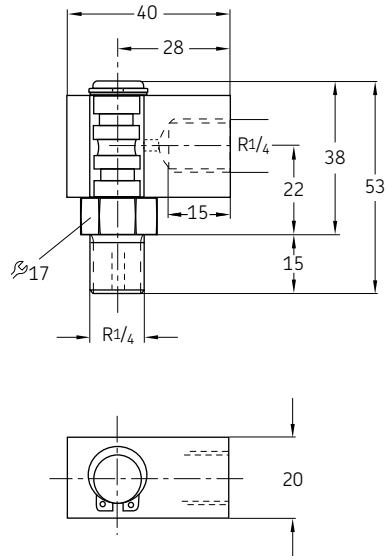

Order number	Designation	Tube ∅	∅ D_1	∅ D_2	Speed max.	Operation pressure max.		Material	Weight	
		mm	in	in	min^{-1}	bar	*psi*		g	*lb*
091308	Straight swivel 1/8 NPT	–	1/8 NPT	1/8 NPT	1	50	725	Steel galvanized	20	*0.04*
223-12567-1	Swivel 90° 1/8 NPT	–	1/8 NPT	1/8 NPT	1	50	725	Steel galvanized	40	*0.08*
626-25702-1	Swivel R1/4XR1/4 MS	–	R1/4 male	R1/4 female	1	200	2 900	Brass	102	*0.22*

626-2...

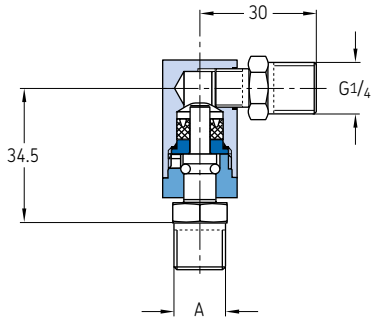

626-25720-2

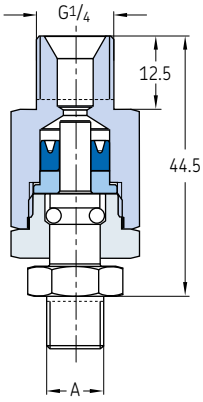

626-26696-2

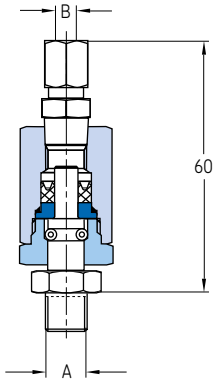

Order number	Designation	Tube ∅	∅ D_1	∅ D_2	Speed max.	Operation pressure max.		Material	Weight	
		mm	in	in	min^{-1}	bar	*psi*		g	*lb*
626-25716-2	Swivel 90° G1/4AxG1/4A F	–	G1/4 male	G1/4 male	80	100	1 450	Steel galvanized	105	*0.23*
626-25540-2	Swivel 90° G1/4AxG1/8A F	–	G1/4 male	G1/8 male	80	100	1 450	Steel galvanized	105	*0.23*
626-26700-2	Swivel 90° G1/8AxD 4 F	4	–	G1/8 male	80	100	1 450	Steel galvanized	95	*0.21*
626-25438-2	Swivel 90° G1/8AxD 6 F	6	–	G1/8 male	80	100	1 450	Steel galvanized	100	*0.22*
626-26701-2	Swivel 90° G1/4AxD 4 F	4	–	G1/4 male	80	100	1 450	Steel galvanized	105	*0.23*
626-25717-2	Swivel 90° G1/4AxD 6 F	6	–	G1/4 male	80	100	1 450	Steel galvanized	102	*0.22*
626-26696-2	Swivel straight G1/8AXD 4 CF	4	–	G1/8	80	100	1 450	Steel galvanized	105	*0.23*

Adapter fittings

Banjo fittings, rotatable

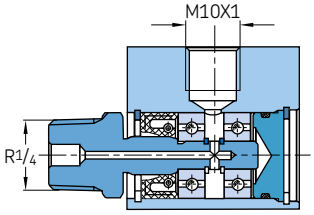

Order number	Designation	Tube ∅D	Thread$_1$	Thread$_2$	Speed max.	Oil pressure max.		Air pressure max.		Material	Weight	
		mm	in	mm	min^{-1}	bar	*psi*	bar	*psi*		g	*lb*
Brass												
DLY930-2	ROTATING JOINT MS 8 G1/4A	8	G 1/4 A	M14x1,5	1400	20	*290*	8	*116*	Brass	246	*0.54*
DLY931	ROTATING JOINT MS 8 R1/8K	8	R 1/8	M14x1,5	1400	20	*290*	8	*116*	Brass	244	*0.54*
Aluminum												
DLY932	ROTATING JOINT AL 8 R1/4K	6	R 1/4	M10x1	1400	5	*72*	–	–	Aluminum	65	*0.14*

Plugs

Vent plugs with profile seal acc. to ISO 9974-2

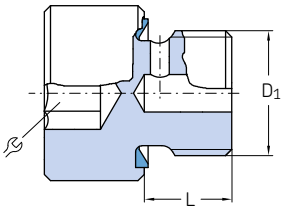

Order number	Designation	D_1	L		Material	Weight	
			mm	mm		g	*lb*
466-431-006	VENTILATING SCREW,HEX. ST M10x1	M10x1	7	10	Steel, galvanized	10	*0.02*
466-431-005	VENTILATING SCREW,6-SOCK ST M10x1	M10x1	7	5	Steel, galvanized	10	*0.02*
466-431-009	VENTILATING SCREW,6-SOCK ST G 1/8A	G 1/8A	7	5	Steel, galvanized	11	*0.02*

Vent plugs sealed by flat washer acc. to DIN 7603

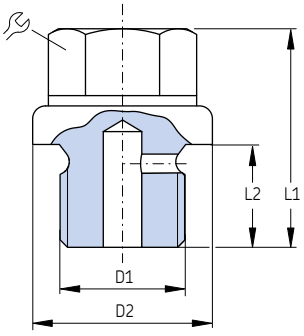

Order number	Designation	D_1	D_2	L_1	L_2		Material	Operating pressure max.		Weight	
			mm	mm	mm	mm		bar	*psi*	g	*lb*
833-020-022	VENTILATING SCREW ST M 8x1	M8x1	12	13,5	7,5	11	Steel, galvanized	45	*650*	7	*0.015*
833-330-016	VENTILATING SCREW ST M10x1	M10x1	14	17	8	11	Steel, galvanized	45	*650*	11	*0.024*
833-330-021	VENTILATING SCREW ST G 1/8A	G 1/8 A	14	17	8	11	Steel, galvanized	45	*650*	10	*0.022*
833-340-034	VENTILATING SCREW ST G 1/4A	G 1/4 A	18	17	8	11	Steel, galvanized	45	*650*	22	*0.049*

Plugs

Screw plugs VSTI

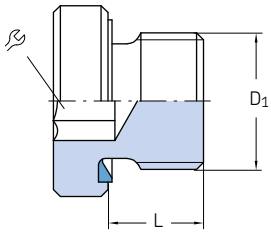

Order number	Designation	Tube ØD	D_1	L		Material	Operating pressure max.		Weight	
			mm	mm	mm		bar	*psi*	g	*lb*
Steel galvanized										
466-419-001	PLUG,CLOS.6-SOCK VSTI G 1/8A-ED CF	G 1/8A	14	8	5	Steel, galvanized	400	*5 800*	8	*0.02*
223-13702-1	PLUG 6-SOCK ST VSTI G 1/4A-ED CF	G 1/4A	19	12	6	Steel, galvanized	400	*5 800*	20	*0.04*
223-13702-7	PLUG 6-SOCK ST VSTI G 1/2A-ED CF	G 1/2A	27	14	10	Steel, galvanized	400	*5 800*	51	*0.11*
223-13702-6	PLUG 6-SOCK ST VSTI G 3/4A -ED CF	G 3/4A	32	16	12	Steel, galvanized	400	*5 800*	79	*0.17*
223-10530-4	PLUG 6-SOCK ST VSTI G1A -ED CF	G 1A	39,9	16	17	Steel, galvanized	400	*5 800*	130	*0.29*
466-429-001	PLUG,CLOS.6-SOCK VSTI M 8x1-ED CF	M8x1 mm	12	8	4	Steel, galvanized	400	*5 800*	7	*0.02*
466-431-001	PLUG,CLOS.6-SOCK VSTI M10x1-ED CF	M10x1 mm	14	8	5	Steel, galvanized	400	*5 800*	8	*0.02*
466-439-001	PLUG,CLOS.6-SOCK VSTI M18x1,5-ED CF	M18x1,5 mm	23,9	14	8	Steel, galvanized	400	*5 800*	32	*0.07*
Stainless steel										
223-13702-5	PLUG 6-SOCK VA VSTI G1/4A -ED	G 1/4A	19	12	6	Stainless steel 1.4571	400	*5 800*	20	*0.04*
223-13702-9	PLUG 6-SOCK VA VSTI G1/2A -ED	G 1/2A	27	14	10	Stainless steel 1.4571	400	*5 800*	51	*0.11*

Screw plugs sealed by flat washer acc. to DIN 7603

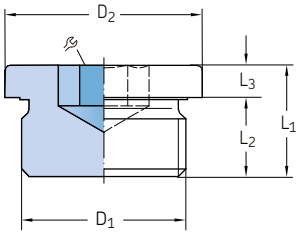

Order number	Designation	D_1	D_2	L_1	L_2	L_3		Material	Weight	
			mm	mm	mm	mm	mm		g	*lb*
DIN910-R1-8-5.8	PLUG,CLOSURE-HEX. 5.8 G 1/8A ZN	G 1/8 A	14	17	8	3	11	Steel, galvanized	11	*0.02*
DIN910-R1-4x8-5.8	PLUG,CLOSURE-HEX. 5.8 G 1/4A ZN	G 1/4 A	18	17	8	3	14	Steel, galvanized	19	*0.04*
DIN910-R3-8-5.8	PLUG,CLOSURE-HEX. 5.8 G 3/8A ZN	G 3/8 A	22	21	12	3	17	Steel, galvanized	38	*0.08*
DIN910-R1-2-5.8	PLUG,CLOSURE-HEX. 5.8 G 1/2A ZN	G 1/2 A	26	26	14	4	19	Steel, galvanized	68	*0.15*
DIN910-R3-4-5.8	PLUG,CLOSURE-HEX. 5.8 G 3/4A ZN	G 3/4 A	32	30	16	4	24	Steel, galvanized	125	*0.28*
DIN910-R1-5.8	PLUG,CLOSURE-HEX. 5.8 G1 A ZN	G 1 A	39	32	16	5	27	Steel, galvanized	199	*0.44*
402-011	PLUG,CLOSURE-HEX. ST M 6x0,75A SW10	M6×0.75	–	9	5	–	10	Steel, galvanized	4	*0.01*
404-011	PLUG,CLOSURE-HEX. ST M 8x1,0A SW11	M8×1	–	9,5	5,5	–	11	Steel, galvanized	5	*0.01*
406-011	PLUG,CLOSURE-HEX. ST M10x1,0A SW12	M10×1	–	12	7	–	12	Steel, galvanized	8	*0.02*
408-211	PLUG,CLOSURE-HEX. ST M12x1,0A SW17	M12×1	–	12	7	–	17	Steel, galvanized	14	*0.03*
408-011	PLUG,CLOSURE-HEX. ST M14x1,5A SW17	M14×1.5	–	12	7	–	17	Steel, galvanized	17	*0.04*
410-011	PLUG,CLOSURE-HEX. ST M16x1,5A SW19	M16×1.5	–	14	8	–	19	Steel, galvanized	25	*0.06*
412-011	PLUG,CLOSURE-HEX. ST M18x1,5A SW22	M18×1.5	–	15	10	–	22	Steel, galvanized	33	*0.07*
DIN908-M10x1-5.8	PLUG,CLOS6-SOCK 5.8 M10x1,5 ZN	M10×1	14	11	8	3	5 [1)]	Steel, galvanized	7	*0.02*
DIN908-M12x1.5-5.8	PLUG,CLOS6-SOCK 5.8 M12x1,0 ZN	M12×1.5	17	15	12	3	6 [1)]	Steel, galvanized	12	*0.03*
DIN908-M14x1.5-5.8	PLUG,CLOS6-SOCK 5.8 M14x1,5 ZN	M14×1.5	19	15	12	3	6 [1)]	Steel, galvanized	16	*0.04*
DIN908-G1-8A-5.8	PLUG,CLOS6-SOCK 5.8 G 1/8A ZN	G 1/8 A	14	11	8	3	5 [1)]	Steel, galvanized	5	*0.01*
DIN908-G3-8A-5.8	PLUG,CLOS6-SOCK 5.8 G 3/8A ZN	G 3/8 A	22	15	12	3	8 [1)]	Steel, galvanized	10	*0.02*

Washers

Flat washers

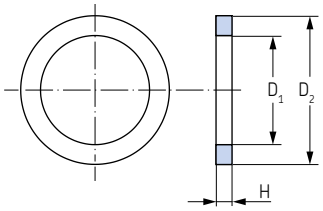

Order number	Designation	D_1	D_2	H	For thread		Material	Weight (100 pcs)	
		mm	mm	mm	mm	in		g	*lb*
Aluminum									
504-019-AL	SEALING RING AL 10,2x 13,9x 1,1	10,2	13,9	1.1	M10	G 1/8	Aluminum	100	*0.22*
Copper									
DIN7603-A6x10-CU	SEALING RING CU 6,2x 9,9x 1,0	6,2	9,9	1	M6	–	Copper	100	*0.22*
DIN7603-A8x11.5-CU	SEALING RING CU 8,2x 11,4x 1,0	8,2	11,4	1	M8	–	Copper	100	*0.22*
504-019	SEALING RING CU 10,2x 13,9x 1,1	10,2	13,9	1.1	M10	G 1/8	Copper	100	*0.22*
508-215-CU	SEALING RING CU 12,2x 15,9x 1,4	12,2	15,9	1.4	M12	–	Copper	100	*0.22*
508-320-CU	SEALING RING CU 12,2x 15,9x 2,0	12,2	15,9	2	M12	–	Copper	100	*0.22*
DIN7603-A12x18-CU	SEALING RING CU 12,2x 14,9x 1,0	12,2	14,9	1	M12	–	Copper	100	*0.22*
508-108	SEALING RING CU 13,3x 17,9x 1,5	13,3	17,9	1.5	–	G 1/4	Copper	100	*0.22*
DIN7603-A14x18-CU	SEALING RING CU 14,2x 17,9x 1,5	14,2	17,9	1.5	M14	–	Copper	200	*0.44*
DIN7603-A16x20-CU	SEALING RING CU 16,2x 19,9x 1,5	16,2	19,9	1.5	M16	–	Copper	200	*0.44*
DIN7603-A17x21-CU	SEALING RING CU 17,2x 20,9x 1,5	17,2	20,9	1.5	–	G 3/8	Copper	200	*0.44*
DIN7603-A18x22-CU	SEALING RING CU 18,2x 21,9x 1,5	18,2	21,9	1.5	M18	–	Copper	200	*0.44*
DIN7603-A20x24-CU	SEALING RING CU 20,2x 23,9x 1,5	20,2	23,9	1.5	M20	–	Copper	200	*0.44*
DIN7603-A21x26-CU	SEALING RING CU 21,2x 25,9x 1,5	21,2	25,9	1.5	–	G 1/2	Copper	200	*0.44*
DIN7603-A22x27-CU	SEALING RING CU 22,2x 26,9x 1,5	22,2	26,9	1.5	M22	–	Copper	300	*0.66*
DIN7603-A27x32-CU	SEALING RING CU 27,3x 31,9x 2,0	27,3	31,9	2	M27	–	Copper	400	*0.88*
DIN7603-A30x36-CU	SEALING RING CU 30,3x 35,9x 2,0	30,3	35,9	2	M30	–	Copper	500	*1.10*
DIN7603-A33x39-CU	SEALING RING CU 33,3x 38,9x 2,0	33,3	38,9	2	M33	–	Copper	500	*1.10*

Quick connectors

Description

SKF quick connectors are the faster alternative when it comes to connecting pipes. Push-in type connectors are available for fast establishment of secure connections. Simply plug the end of the line into the pre-installed connector – all done! No wrench is required. Connections can be made more easily and quickly, especially in difficult-to-access areas. Push-in type fittings can be used to connect the entire system of lines from the pump to the metering devices, pressure switches, etc. – all the way to the lubrication points.
The fittings feature internal claws to hold the tubing tight, even at 350 bar (*5076 psi*) . They are equally suitable for plastic and steel tubing. Two versions of quick connectors are offered by SKF:

- Single-seal quick connectors (350 bar, *5076 psi*) suitable for grease lubrication systems
- Triple-seal quick connectors (300 bar, *4350 psi*) suitable for oil and grease lubrication systems

Features and benefits

- Fast and virtually leakage-free connection
- No wrench tightening required
- Time savings due to easy and quick system assembly
- Connections in systems (without system pressure) can be easily opened and reclosed again
- Protection against penetrating dirt

Applications

- Food and beverage industry
- Renewable energy industry
- Construction machinery
- Asphalt mixing plants
- Agricultural machines
- Material handling
- On-road vehicles
- Etc.

Quick connectors

Single-seal quick connectors (350 bar)

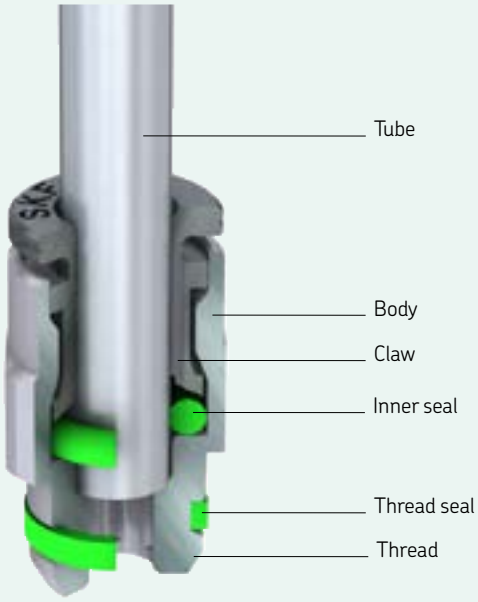

Description

SKF single-seal quick connectors have one O-ring. They are suitable for grease lubrication systems with system pressures up to 350 bar.

Features and benefits

- Suitable for grease
- Smaller
- Protection caps needed under harsh conditions
- Max. operating pressure 350 bar
- For tube ∅6 mm
- Marking of the collet: with groove
- Surface: nickel-plated C5M (sea water proof)
- Pipe sealing, expansion ring for collet chuck
- Plastic pipes can be used without claw groove
- Thread sealing via spring ring

Single-seal quick connectors

Straight screw-in connectors

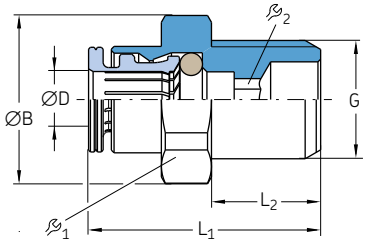

Order number	Designation	Tube ØD	G	ØB	L_1	L_2			Seal	Material	Operating pressure max.		Weight (100 pcs)	
		mm	in	mm	mm	mm	mm	mm			bar	*psi*	g	*lb*
226-14139-1	PUSH-IN FITT.GEZM 6-1/4	6	G 1/4B	18,5	12	25,5	17	4	NBR	Brass, nickel-plated	350	*5 080*	2 000	*4.41*

Straight screw-in connectors with FKM threaded seal

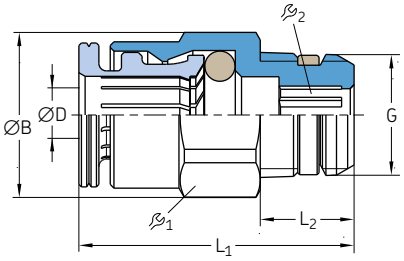

Order number	Designation	Tube ØD	G	ØB	L_1	L_2			Seal	Material	Operating pressure max.		Weight (100 pcs)	
		mm	in	mm	mm	mm	mm	mm			bar	*psi*	g	*lb*
226-14111-1	PUSH-IN FITT.GEKM S 6-1/8	6	R 1/8	13,2	7.5	22	12	4	FKM	Brass, nickel-plated	350	*5 080*	1 000	*2.21*
226-10205-5	PUSH-IN FITT.GEZM S 6-1/4	6	G 1/4B	15,2	7	21,5	14	4	FKM	Brass, nickel-plated	350	*5 080*	1 400	*3.09*

Single-seal quick connectors

Adapters with tapered thread

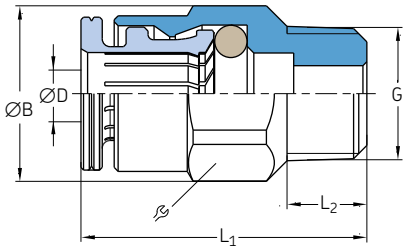

Order number	Designation	Tube ØD	G	ØB	L_1	L_2		Seal	Material	Operating pressure max.		Weight (100 pcs)	
		mm		mm	mm	mm	mm			bar	*psi*	g	*lb*
226-14111-4	PUSH-IN FITT. GEKM 6-M6×1	6	M6×1 tap.	13,2	24	6	12	NBR	Brass, nickel-plated	350	*5 080*	900	*1.98*
226-14111-2	PUSH-IN FITt. GEKM 6-M8×1	6	M8×1 tap.	13,2	23	6	12	NBR	Brass, nickel-plated	350	*5 080*	1 000	*2.21*
226-14111-3	PUSH-IN FITT. GEKM 6-M10×1	6	M10×1 tap.	13,2	21,5	6	12	NBR	Brass, nickel-plated	350	*5 080*	1 000	*2.21*
226-10622-8	PUSH-IN FITT. GEKM 6-1/8	6	R 1/8	13,2	22	7,5	12	NBR	Brass, nickel-plated	350	*5 080*	1 000	*2.21*

Banjo fittings with tapered thread

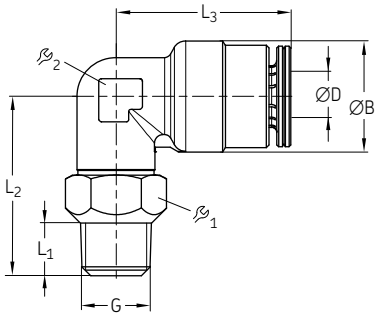

Order number	Designation	Tube ØD	G	ØB	L_1	L_2	L_3			Seal	Material	Operating pressure max.		Weight (100 pcs)	
		mm		mm	mm	mm	mm	mm	mm			bar	*psi*	g	*lb*
226-14157-3	PUSH-IN FITT. WEDKM 6-M 6×1	6	M6×1 tap.	12,7	6	20,5	20	10	9	NBR	Brass, nickel-plated	350	*5 080*	1 600	*3,53*
226-14157-1	PUSH-IN FITT. WEDKM 6-M 8×1	6	M8×1 tap.	12,7	6	20,5	20	10	9	NBR	Brass, nickel-plated	350	*5 080*	1 600	*3,53*
226-14157-2	PUSH-IN FITT. WEDKM 6-M10×1	6	M10×1 tap.	12,7	6	20,5	20	12	9	NBR	Brass, nickel-plated	350	*5 080*	2 000	*4,41*
226-13756-9	PUSH-IN FITT. WEDKM 6-1/8	6	R 1/8	12,7	7,5	21	20	12	9	NBR	Brass, nickel-plated	350	*5 080*	1 900	*4,19*

Single-seal quick connectors

Elbows with tapered thread

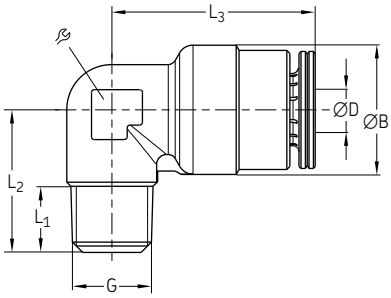

Order number	Designation	Tube ØD	G	ØB	L_1	L_2	L_3		Seal	Material	Operating pressure max.		Weight (100 pcs)	
		mm		mm	mm	mm	mm	mm			bar	*psi*	g	*lb*
226-14123-4	PUSH-IN FITT. WEKM 6-M 6×1	6	M6×1 tap.	12,7	6	15	20	9	NBR	Brass, nickel-plated	350	*5 080*	1 400	*3.09*
226-14123-2	PUSH-IN FITT. WEKM 6-M 8×1	6	M8×1 tap.	12,7	6,5	14	20	9	NBR	Brass, nickel-plated	350	*5 080*	1 300	*2.87*
226-14123-3	PUSH-IN FITT. WEKM 6-M10×1	6	M10×1 tap.	12,7	6	14	20	9	NBR	Brass, nickel-plated	350	*5 080*	1 500	*3.31*
226-14123-5	PUSH-IN FITT. WEKM 6-1/8	6	R 1/8	12,7	7,5	15,5	20	9	NBR	Brass, nickel-plated	350	*5 080*	1 400	*3.09*
226-13753-9 [1]	PUSH-IN FITT. WEKM S 6-1/8	6	R 1/8	12,7	7,5	15,5	20	9	NBR	Brass, nickel-plated	350	*5 080*	1 400	*3.09*

[1] with FKM threaded seal

Banjo fittings with O-ring threaded seal

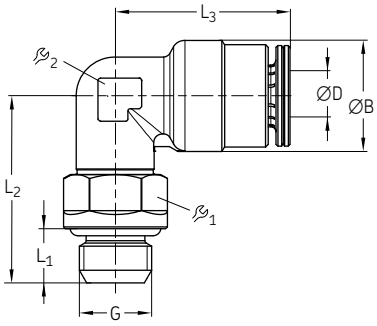

Order number	Designation	Tube ØD	G	ØB	L_1	L_2	L_3			Seal	Material	Operating pressure max.		Weight (100 pcs)	
		mm		mm	mm	mm	mm	mm	mm			bar	*psi*	g	*lb*
226-11313-8	PUSH-IN FITT. WEDZM 6-1/4B	6	G 1/4B	12,7	7	23	20	15	9	NBR	Brass, nickel-plated	350	*5 080*	2 500	*5.51*
226-11313-9	PUSH-IN FITT. WEDZM 6-1/8B	6	G 1/8B	12,7	6	21	20	12	9	NBR	Brass, nickel-plated	350	*5 080*	2 300	*5.07*
226-11315-1	PUSH-IN FITT. WEDZM 6-M 6	6	M6×1	12,7	7	21	20	10	9	NBR	Brass, nickel-plated	350	*5 080*	2 300	*5.07*
226-11315-2	PUSH-IN FITT. WEDZM 6-M 8×1	6	M8×1	12,7	7	22	20	10	9	NBR	Brass, nickel-plated	350	*5 080*	2 400	*5.29*

Single-seal quick connectors

Banjo fittings with FKM threaded seal

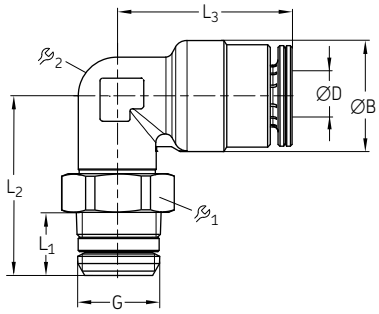

Order number	Designation	Tube ØD	G	ØB	L_1	L_2	L_3			Seal	Material	Operating pressure max.		Weight (100 pcs)	
		mm	in	mm	mm	mm	mm	mm	mm			bar	*psi*	g	*lb*
226-14157-4	PUSH-IN FITT. WEDKM S 6-1/4	6	R 1/4	12,7	11	24,5	20,1	14	9	NBR	Brass, nickel-plated	350	*5 080*	2 000	*4.41*
226-14157-5	PUSH-IN FITT. WEDKM S 6-1/8	6	R 1/8	12,7	7,5	21	20	12	9	NBR	Brass, nickel-plated	350	*5 080*	1 900	*4.19*

Banjo fittings with hexagon socket and O-ring threaded seal

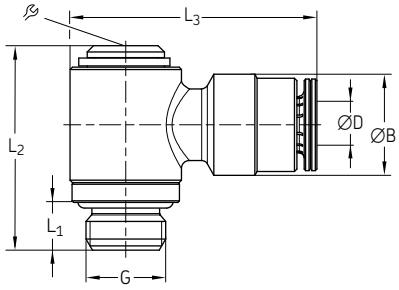

Order number	Designation	Tube ØD	G	ØB	L_1	L_2	L_3		Seal	Material	Operating pressure max.		Weight (100 pcs)	
		mm		mm	mm	mm	mm	mm			bar	*psi*	g	*lb*
226-10223-2	PUSH-IN FITT. WEDZM 6-1/8	6	G 1/8B	12,7	6	25,7	24,1	5	NBR	Brass, nickel-plated	350	*5 080*	2 700	*5.95*
226-10223-4	PUSH-IN FITT. WEDZM 6-M 8×1	6	M 8×1	12,7	6	26	24	5	NBR	Brass, nickel-plated	350	*5 080*	2 500	*5.51*
226-10223-6	PUSH-IN FITT. WEDZM 6-M10×1	6	M10×1	12,7	6	25,7	24,1	5	NBR	Brass, nickel-plated	350	*5 080*	2 600	*5.73*

Single-seal quick connectors

Screw-in T-connectors

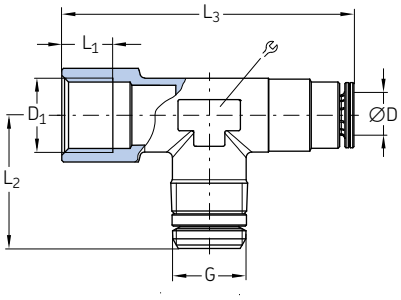

Order number	Designation	Tube ØD	G	D_1	L_1	L_2	L_3		Seal	Material	Operating pressure max.		Weight	
		mm			mm	mm	mm	mm			bar	*psi*	g	*lb*
226-14097-5	PUSH-IN FITT. TSM S 6-1/4	6	G 1/4	G 1/4	9	23,5	51,5	14	NBR	Brass, nickel-plated	350	*5 080*	50	*0.11*

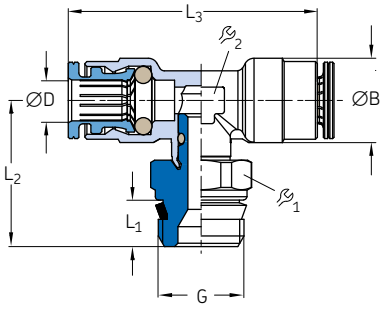

Order number	Designation	Tube ØD	G	ØB	L_1	L_2	L_3	1	2	Seal	Material	Operating pressure max.		Weight	
		mm		mm	mm	mm	mm	mm	mm			bar	*psi*	g	*lb*
226-10159-1	PUSH-IN FITT. TEDZM S 6-1/8	6	G 1/8B	12,7	5,5	20,3	40,2	9	9	NBR	Brass, nickel-plated	350	*5 080*	27	*0.06*
226-10159-9	PUSH-IN FITT. TEDZM S 6-1/4	6	G 1/4B	12,7	7	22	40	14	9	NBR	Brass, nickel-plated	350	*5 080*	35	*0.08*

Single-seal quick connectors

T-connectors

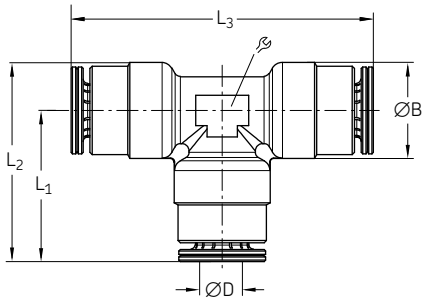

Order number	Designation	Tube ØD	ØB	L_1	L_2	L_3		Seal	Material	Operating pressure max.		Weight	
		mm	mm	mm	mm	mm	mm			bar	*psi*	g	*lb*
226-14097-4	PUSH-IN FITT. TSM 6	6	12,7	20	26	40	6	NBR	Brass, nickel-plated	350	*5 080*	20	*0.04*

Straight bulkhead connectors

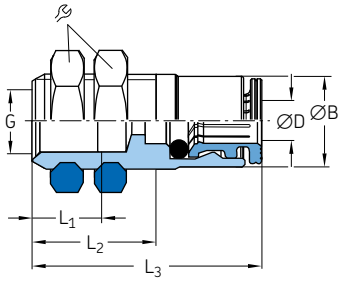

Order number	Designation	Tube ØD	G	ØB	L_1	L_2	L_3		Seal	Material	Operating pressure max.		Weight	
		mm		mm	mm	mm	mm	mm			bar	*psi*	g	*lb*
226-10214-4	PUSH-IN FITT. SVM 6-G 1/8	6	G 1/8	12,5	9	17	31,6	17	NBR	Brass, nickel-plated	350	*5 080*	26	*0.06*
226-10214-7	PUSH-IN FITT. SVM 6-M 8×1	6	M 8×1	12,5	9	17	31,5	17	NBR	Brass, nickel-plated	350	*5 080*	27	*0.06*

Single-seal quick connectors

Tube-to-tube connector

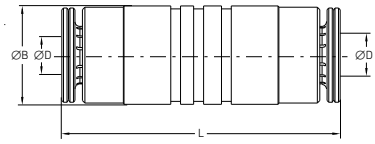

Order number	Designation	Tube ØD	ØB	L	Seal	Material	Operating pressure max.		Weight	
		mm	mm	mm			bar	*psi*	g	*lb*
226-13773-4	CONNECTOR GSM 6	6	12	34	NBR	Brass, nickel-plated	350	*5 080*	18	*0.04*

Triple-seal quick connectors

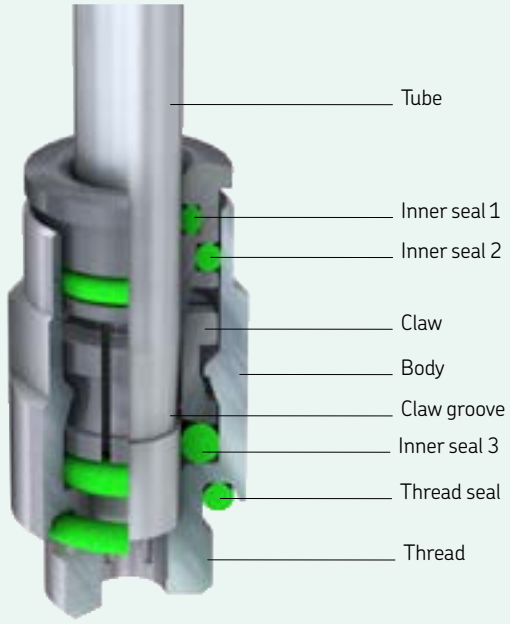

Claw grooves

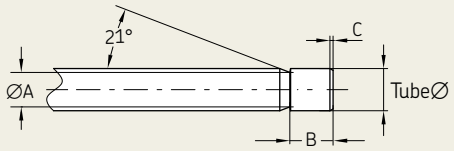

Description

SKF triple-seal quick connectors have three O-rings. They are suitable for oil lubrication systems with system pressures up to 300 bar. For a good union, steel pipes or fittings used as hose end fittings must be prepared with a claw groove. Plastic pipes can be connected directly without an additional claw groove.

For metal pipes, a claw groove is required at the end of the pipe

Tube Ø	A +0,3	B ±0,2	C
4	3,1	5	0,3 ... 0,7
6	4,9	6,2	0,4 ... 0,9
8	6,9	6,2	0,5 ... 0,9

Tool for the production of pipe ends (cutting and groove-forming) available in the chapter on tools.

Features and benefits

- Suitable for oil and fluid grease
- Better sealing by three O-rings (leakage-free)
- Max. operating pressure 300 bar
- For tube Ø4, 6 and 8 mm
- Marking of the collet: plain
- Surface: collet nickel-plated C4
- Insertion depth for plastic and steel tubing
  - Ø4 mm: 19 mm
  - Ø6 mm: 22 mm
  - Ø8 mm: 24 mm
- Reduction of bending forces
- Sealing for the pipe, expansion ring for collet chuck
- Sealing thread O-ring

Triple-seal quick connectors

Straight screw-in connectors with cylindrical thread

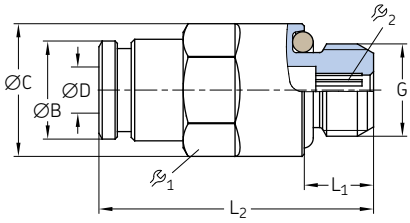

Order number	Designation	Tube ØD	G	ØB	ØC	L_1	L_2			Seal	Material	Operating pressure max.		Weight (100 pcs)	
		mm		mm	mm	mm	mm	mm	mm			bar	*psi*	g	*lb*
451-004-260-VS	PUSH-IN FITT.GEZ 4-M6 NBR	4	M6	8,8	11,5	4,5	25	10	2,5	NBR	Brass	300	*4 350*	1 000	*2.21*
404-073-VS	PUSH-IN FITT.GEZ 4-M6x0,75 NBR	4	M6×0,75	8,8	11,5	4,5	25,3	10	2,5	NBR	Brass	300	*4 350*	1 000	*2.21*
404-063-VS	PUSH-IN FITT.GEZ 4-M8 NBR	4	M8	8,8	11,5	6	23,8	10	2,5	NBR	Brass	300	*4 350*	900	*1.98*
404-003-VS	PUSH-IN FITT.GEZ 4-M8x1 NBR	4	M8×1	8,8	11,5	6	23,8	10	2,5	NBR	Brass	300	*4 350*	900	*1.98*
404-003-S8-VS	PUSH-IN FITT.GEZ 4-M8x1 FPM	4	M8×1	8,8	11,5	6	23,8	10	2,5	FPM	Brass	300	*4 350*	1 000	*2.21*
404-006-VS	PUSH-IN FITT.GEZ 4-M10x1 NBR	4	M10×1	8,8	13,5	6	23,8	12	2,5	NBR	Brass	300	*4 350*	1 400	*3.09*
404-006-S8-VS	PUSH-IN FITT.GEZ 4-M10x1 FPM	4	M10×1	8,8	13,5	6	23,8	12	2,5	FPM	Brass	300	*4 350*	1 400	*3.09*
404-040-VS	PUSH-IN FITT.GEZ 4-G1/8 NBR	4	G 1/8	8,8	13,5	6	23,8	12	2,5	NBR	Brass	300	*4 350*	1 400	*3.09*
406-158-VS	PUSH-IN FITT. GEZ 6-M8x1 NBR	6	M8×1	11,7	13,2	6	30,5	12	3	NBR	Brass	300	*4 350*	1 500	*3.31*
406-004-VS	PUSH-IN FITT. GEZ 6-M10x1 NBR	6	M10×1	11,7	13,5	6	27	12	4	NBR	Brass	300	*4 350*	1 500	*3.31*
406-004-S8-VS	PUSH-IN FITT. GEZ 6-M10x1 FPM	6	M10×1	11,7	13,5	6	27	12	4	FPM	Brass	300	*4 350*	1 400	*3.09*
456-004-VS	PUSH-IN FITT. GEZ 6-G1/8 NBR	6	G 1/8	11,7	13,5	6	27	12	4	NBR	Brass	300	*4 350*	1 400	*3.09*
456-004-S8-VS	PUSH-IN FITT. GEZ 6-G1/8 FPM	6	G 1/8	11,7	13,5	6	27	12	4	FPM	Brass	300	*4 350*	1 400	*3.09*
406-054-VS	PUSH-IN FITT. GEZ 6-G1/4 NBR	6	G 1/4	11,7	16,4	7	28	12	4	NBR	Brass	300	*4 350*	1 900	*4.19*
406-162-VS	PUSH-IN FITT. GEZ 6-M12x1 NBR	6	M12×1	11,7	15,4	7	28	14	4	NBR	Brass	300	*4 350*	2 200	*4.85*
406-162-S8-VS	PUSH-IN FITT. GEZ 6-M12x1 FPM	6	M12×1	11,7	15,4	7	28	14	4	FPM	Brass	300	*4 350*	2 400	*5.29*
408-004-VS	PUSH-IN FITT. GEZ 8-M10x1 NBR	8	M10×1	13,9	15,2	6	32,3	14	5	NBR	Brass	300	*4 350*	2 000	*4.41*
408-004-S8-VS	PUSH-IN FITT. GEZ 8-M10x1 FPM	8	M10×1	13,9	15,2	6	32,3	14	5	FPM	Brass	300	*4 350*	2 000	*4.41*
408-162-VS	PUSH-IN FITT. GEZ 8-M12x1 NBR	8	M12×1	13,9	15,2	7	32,8	14	6	NBR	Brass	300	*4 350*	2 300	*5.07*
408-162-S8-VS	PUSH-IN FITT. GEZ 8-M12x1 FPM	8	M12×1	13,9	15,2	7	32,8	14	6	FPM	Brass	300	*4 350*	2 000	*4.41*
408-054-VS	PUSH-IN FITT. GEZ 8-G1/4 NBR	8	G 1/4	13,9	16,4	7	30,8	15	6	NBR	Brass	300	*4 350*	3 000	*6.62*

Straight screw-in connectors with tapered thread

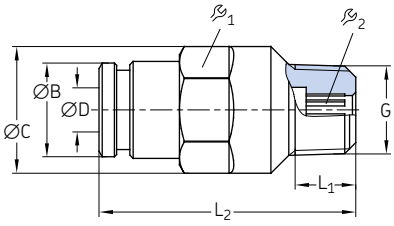

Order number	Designation	Tube ØD	G	ØB	ØC	L_1	L_2			Seal	Material	Operating pressure max.		Weight (100 pcs)	
		mm		mm	mm	mm	mm	mm	mm			bar	*psi*	g	*lb*
451-004-462-VS	PUSH-IN FITT. GEK 4-M6K NBR	4	M6 tap.	8,8	11,5	5,5	25,8	10	2,5	NBR	Brass	300	*4 350*	900	*1.98*
451-004-471-VS	PUSH-IN FITT. GEK 4-M6x0,75K NBR	4	M6×0.75 tap.	8,8	11,5	5,5	25,8	10	2,5	NBR	Brass	300	*4 350*	900	*1.98*
451-004-498-VS	PUSH-IN FITT. GEK 4-M8x1K NBR	4	M8×1 tap.	8,8	11,5	5,5	23,3	10	2,5	NBR	Brass	300	*4 350*	900	*1.98*
451-004-518-VS	PUSH-IN FITT. GEK 4-M10x1K NBR	4	M10×1 tap.	8,8	11,5	5,5	22,8	10	2,5	NBR	Brass	300	*4 350*	1 100	*2.43*
404-673K-V1-VS	PUSH-IN FITT. GEK 4-1/4-28 SAE LT NBR	4	1/4-28 SAE LT	8,8	11,5	5,1	26,3	10	2,5	NBR	Brass	300	*4 350*	1 000	*2.21*
404-040K-V1-VS	PUSH-IN FITT. GEK 4-1/8 NPTF NBR	4	1/8 NPTF	8,8	11,5	8	24,8	10	2,5	NBR	Brass	300	*4 350*	1 200	*2.65*
451-006-468-VS	PUSH-IN FITT. GEK 6-M6K NBR	6	M6 tap.	11,7	13,5	5,5	30	12	2,5	NBR	Brass	300	*4 350*	1 400	*3.09*
451-006-498-VS	PUSH-IN FITT. GEK 6-M8x1K NBR	6	M8×1 tap.	11,7	13,5	5,5	29,5	12	4	NBR	Brass	300	*4 350*	1 400	*3.09*
451-006-518-VS	PUSH-IN FITT. GEK 6-M10x1K NBR	6	M10×1 tap.	11,7	13,5	5,5	27	12	4	NBR	Brass	300	*4 350*	1 500	*3.31*
406-423W-VS	PUSH-IN FITT. GEK 6-R1/8K NBR	6	R 1/8	11,7	13,5	6,5	28,5	12	4	NBR	Brass	300	*4 350*	1 500	*3.31*
406-423N-VS	PUSH-IN FITT. GEK 6-1/8 NPT NBR	6	1/8 NPT	11,7	13,5	7,5	28,5	12	4	NBR	Brass	300	*4 350*	1 600	*3.53*

Triple-seal quick connectors

Tube-to-tube connectors

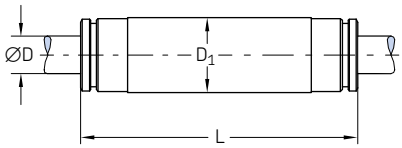

Order number	Designation	Tube ØD	D_1	L	Material	Operating pressure max.		Weight (100 pcs)	
		mm	mm	mm		bar	*psi*	g	*lb*
454-504-041-VS	CONNECTOR GS 4 NBR	4	**10**	38,5	Brass	300	*4 350*	1 500	*3.31*
406-426-VS	CONNECTOR GS 6 NBR	6	**12**	44,5	Brass	300	*4 350*	2 000	*4.41*

Banjo fittings with banjo bolt and cylindrical thread

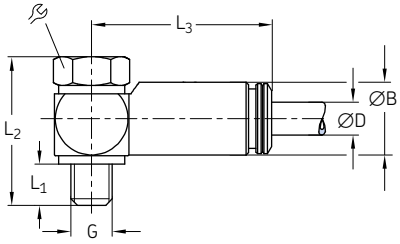

Order number	Designation	Tube ØD	G	ØB	L_1	L_2	L_3	🔧	Seal	Material	Operating pressure max.		Weight (100 pcs)	
		mm		mm	mm	mm	mm	mm			bar	*psi*	g	*lb*
504-161-VS	BANJO FITTING SWVZ-4-M6 NBR	4	**M6**	8,8	5	19,5	22,3	9	NBR	Brass	300	*4350*	1300	*2.87*
504-401-S1-VS	BANJO FITTING SWVZ-4-M5 NBR	4	**M5**	8,8	5	18	21,8	8	NBR	Brass	300	*4 350*	1 100	*2.43*
504-411-VS	BANJO FITTING SWVZ-4-M8 NBR	4	**M8**	8,8	7	20	23,8	12	NBR	Brass	300	*4 350*	1 700	*3.75*
504-401-VS	BANJO FITTING SWVZ-4-M8x1 NBR	4	**M8×1**	8,8	7	20	23,8	12	NBR	Brass	300	*4 350*	1 800	*3.97*
504-103-VS	BANJO FITTING SWVZ-4-M10x1 NBR	4	**M10×1**	8,8	7	22,5	24,8	14	NBR	Brass	300	*4 350*	2 400	*5.29*
445-519-041-VS	BANJO FITTING SWVZ-4-G1/8A NBR	4	**G 1/8A**	8,8	7	22,5	24,8	14	NBR	Brass	300	*4 350*	2 400	*5.29*

Triple-seal quick connectors

Elbows with tapered thread

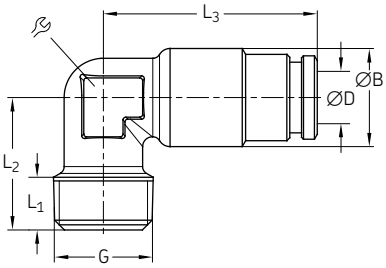

Order number	Designation	Tube ØD	G	D_1	L_1	L_2	L_3		Seal	Material	Operating pressure max.		Weight (100 pcs)	
		mm		mm	mm	mm	mm	mm			bar	*psi*	g	*lb*
453-004-471-VS	PUSH-IN FITT. WEK 4-M6K NBR	4	M6 tap.	10	6	14	21,8	9	NBR	Brass	300	*4 350*	1 100	*2.43*
453-004-471-S8-VS	PUSH-IN FITT. WEK 4-M6K FPM	4	M6 tap.	10	6	14	21,8	9	FPM	Brass	300	*4 350*	1 200	*2.65*
504-201-VS	PUSH-IN FITT. WEK 4-M8x1K NBR	4	M8×1 tap.	10	6	13,5	21,8	9	NBR	Brass	300	*4 350*	1 100	*2.43*
504-201-S8-VS	PUSH-IN FITT. WEK 4-M8x1K FPM	4	M8×1 tap.	10	6	13,5	21,8	9	FPM	Brass	300	*4 350*	1 200	*2.65*
504-202-VS	PUSH-IN FITT. WEK 4-M10x1K NBR	4	M10×1 tap.	10	6	13,5	21,8	9	NBR	Brass	300	*4 350*	1 100	*2.43*
504-202-S8-VS	PUSH-IN FITT. WEK 4-M10x1K FPM	4	M10×1 tap.	10	6	13,5	21,8	9	FPM	Brass	300	*4 350*	1 300	*2.87*
514-018-VS	PUSH-IN FITT. WEK 4-R1/8K NBR	4	R 1/8	10	7,5	15	21,8	9	NBR	Brass	300	*4 350*	1 200	*2.65*
514-018-S8-VS	PUSH-IN FITT. WEK 4-R1/8K FPM	4	R 1/8	10	7,5	15	21,8	9	FPM	Brass	300	*4 350*	1 300	*2.87*
504-200K-V1-VS	PUSH-IN FITT. WEK 4-1/4-28SAE LT NBR	4	1/4-28SAE LT	10	5,1	15,5	21,8	9	NBR	Brass	300	*4 350*	1 200	*2.65*
514-018K-V1-VS	PUSH-IN FITT. WEK 4-1/8NPT NBR	4	1/8 NPT	10	7	15	21,8	9	NBR	Brass	300	*4 350*	1 300	*2.87*
453-006-468-VS	PUSH-IN FITT. WEK 6-M6K NBR	6	M6 tap.	12,5	6	15	26	10	NBR	Brass	300	*4 350*	2 000	*4.41*
453-006-468-S8-VS	PUSH-IN FITT. WEK 6-M6K FPM	6	M6 tap.	12,5	6	15	26	10	FPM	Brass	300	*4 350*	1 800	*3.97*
506-508-VS	PUSH-IN FITT. WEK 6-M8x1K NBR	6	M8×1 tap.	12,5	6,5	14	26	10	NBR	Brass	300	*4 350*	1 600	*3.53*
506-508-S8-VS	PUSH-IN FITT. WEK 6-M8x1K FPM	6	M8×1 tap.	12,5	6,5	14	26	10	FPM	Brass	300	*4 350*	1 800	*3.97*
506-510-VS	PUSH-IN FITT. WEK 6-M10x1K NBR	6	M10×1 tap.	12,5	6	14	26	10	NBR	Brass	300	*4 350*	1 600	*3.53*
506-510-S8-VS	PUSH-IN FITT. WEK 6-M10x1K FPM	6	M10×1 tap.	12,5	6	14	26	10	FPM	Brass	300	*4 350*	1 700	*3.75*
506-511-VS	PUSH-IN FITT. WEK 6-R1/8K NBR	6	R 1/8	12,5	8,5	16,5	26	10	NBR	Brass	300	*4 350*	1 700	*3.75*
506-511-S8-VS	PUSH-IN FITT. WEK 6-R1/8K FPM	6	R 1/8	12,5	8,5	16,5	26	10	FPM	Brass	300	*4 350*	1 800	*3.97*
506-511K-V1-VS	PUSH-IN FITT. WEK 6-1/8NPT NBR	6	1/8 NPT	12,5	8,5	16,5	26	10	NBR	Brass	300	*4 350*	1 900	*4.19*
455-565-068-VS	PUSH-IN FITT. WEK 6-R1/4K NBR	6	R 1/4	12,5	11,5	19,5	26	10	NBR	Brass	300	*4 350*	1 900	*4.19*

Triple-seal quick connectors

Banjo fittings with cylindrical thread

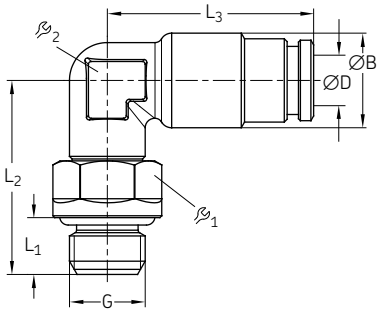

Order number	Designation	Tube ØD	G	ØB	L_1	L_2	L_3			Seal	Material	Operating pressure max.		Weight (100 pcs)	
		mm		mm	mm	mm	mm	mm	mm			bar	*psi*	g	*lb*
504-100-VS	PUSH-IN FITT. WEDZ 4-M6x1 NBR	4	M6×1	10	4,5	17,5	21,8	9	9	NBR	Brass	300	*4 350*	1 200	*2.65*
504-101-VS	PUSH-IN FITT. WEDZ 4-M8x1 NBR	4	M8×1	10	6	20,5	21,8	10	9	NBR	Brass	300	*4 350*	1 500	*3.31*
504-101-S8-VS	PUSH-IN FITT. WEDZ 4-M8x1 FPM	4	M8×1	10	6	20,5	21,8	10	9	FPM	Brass	300	*4 350*	1 500	*3.31*
504-102-VS	PUSH-IN FITT. WEDZ 4-M10x1 NBR	4	M10×1	10	6	20,5	21,8	12	9	NBR	Brass	300	*4 350*	2 000	*4.41*
504-102-S8-VS	PUSH-IN FITT. WEDZ 4-M10x1 FPM	4	M10×1	10	6	20,5	21,8	12	9	FPM	Brass	300	*4 350*	2 000	*4.41*
504-108-VS	PUSH-IN FITT. WEDZ 4-G1/8A NBR	4	G 1/8A	10	6	20,5	21,8	12	9	NBR	Brass	300	*4 350*	1 800	*3.97*
504-108-S8-VS	PUSH-IN FITT. WEDZ 4-G1/8A FPM	4	G 1/8A	10	6	20,5	21,8	12	9	FPM	Brass	300	*4 350*	1 900	*4.19*
506-139-VS	PUSH-IN FITT. WEDZ 6-M8x1 NBR	6	M8×1	12,5	6	21	26	10	10	NBR	Brass	300	*4 350*	1 900	*4.19*
506-139-S8-VS	PUSH-IN FITT. WEDZ 6-M8x1 FPM	6	M8×1	12,5	6	21	26	10	10	FPM	Brass	300	*4 350*	2 000	*4.41*
506-140-VS	PUSH-IN FITT. WEDZ 6-M10x1 NBR	6	M10×1	12,5	6	21	26	12	10	NBR	Brass	300	*4 350*	2 200	*4.85*
506-140-S8-VS	PUSH-IN FITT. WEDZ 6-M10x1 FPM	6	M10×1	12,5	6	21	26	12	10	FPM	Brass	300	*4 350*	2 200	*4.85*
506-108-VS	PUSH-IN FITT. WEDZ 6-G1/8A NBR	6	G 1/8A	12,5	6	21	26	12	10	NBR	Brass	300	*4 350*	2 200	*4.85*
506-108-S8-VS	PUSH-IN FITT. WEDZ 6-G1/8A FPM	6	G 1/8A	12,5	6	21	26	12	10	FPM	Brass	300	*4 350*	2 300	*5.07*
506-142-VS	PUSH-IN FITT. WEDZ 6-M12x1 NBR	6	M12×1	12,5	7	23	26	14	10	NBR	Brass	300	*4 350*	2 700	*5.95*
506-142-S8-VS	PUSH-IN FITT. WEDZ 6-M12x1 FPM	6	M12×1	12,5	7	23	26	14	10	FPM	Brass	300	*4 350*	2 700	*5.95*
506-143-VS	PUSH-IN FITT. WEDZ 6-G1/4A NBR	6	G 1/4A	12,5	7	23	26	15	10	NBR	Brass	300	*4 350*	2 900	*6.39*
508-142-VS	PUSH-IN FITT. WEDZ 8-M12x1 NBR	8	M12×1	14,5	7	23	28,8	14	12	NBR	Brass	300	*4 350*	3 200	*7.06*
508-142-S8-VS	PUSH-IN FITT. WEDZ 8-M12x1 FPM	8	M12×1	14,5	7	23	28,8	14	12	FPM	Brass	300	*4 350*	3 200	*7.06*

Triple-seal quick connectors

Banjo fittings with tapered thread

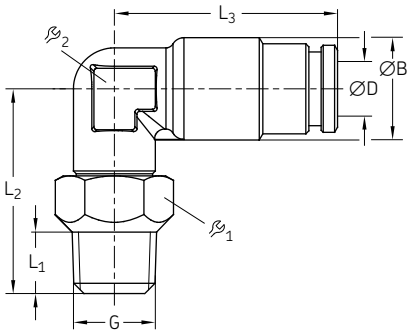

Order number	Designation	Tube ØD	G	ØB	L_1	L_2	L_3	$\mathcal{P}_1$	$\mathcal{P}_2$	Seal	Material	Operating pressure max.		Weight (100 pcs)	
		mm		mm	mm	mm	mm	mm	mm			bar	*psi*	g	*lb*
455-546-048-VS	PUSH-IN FITT. WEDK 4-M6K NBR	4	M6 tap.	10	6	20	21,8	10	9	NBR	Brass	300	*4 350*	1 400	*3.09*
455-546-048-S8-VS	PUSH-IN FITT. WEDK 4-M6K FPM	4	M6 tap.	10	6	20	21,8	10	9	FPM	Brass	300	*4 350*	1 500	*3.31*
455-529-048-VS	PUSH-IN FITT. WEDK 4-M8x1K NBR	4	M8×1 tap.	10	6	20	21,8	10	9	NBR	Brass	300	*4 350*	1 600	*3.53*
455-529-048-S8-VS	PUSH-IN FITT. WEDK 4-M8x1K FPM	4	M8×1 tap.	10	6	20	21,8	10	9	FPM	Brass	300	*4 350*	1 600	*3.53*
455-531-048-VS	PUSH-IN FITT. WEDK 4-M10x1K NBR	4	M10×1 tap.	10	6	20	21,8	12	9	NBR	Brass	300	*4 350*	1 800	*3.97*
455-531-048-S8-VS	PUSH-IN FITT. WEDK 4-M10x1K FPM	4	M10×1 tap.	10	6	20	21,8	12	9	FPM	Brass	300	*4 350*	1 800	*3.97*
455-569-048-VS	PUSH-IN FITT. WEDK 4-R1/8K NBR	4	R 1/8	10	7,5	20,5	21,8	12	9	NBR	Brass	300	*4 350*	2 000	*4.41*
455-529-068-VS	PUSH-IN FITT. WEDK 6-M8x1K NBR	6	M8×1 tap.	12,5	6	20,5	26	10	10	NBR	Brass	300	*4 350*	2 000	*4.41*
455-529-068-S8-VS	PUSH-IN FITT. WEDK 6-M8x1K FPM	6	M8×1 tap.	12,5	6	20,5	26	10	10	FPM	Brass	300	*4 350*	2 000	*4.41*
455-531-068-VS	PUSH-IN FITT. WEDK 6-M10x1K NBR	6	M10×1 tap.	12,5	6	20,5	26	12	10	NBR	Brass	300	*4 350*	2 300	*5.07*
455-531-068-S8-VS	PUSH-IN FITT. WEDK 6-M10x1K FPM	6	M10×1 tap.	12,5	6	20,5	26	12	10	FPM	Brass	300	*4 350*	2 300	*5.07*
455-546-068-VS	PUSH-IN FITT. WEDK 6-M6x1K NBR	6	M6×1 tap.	12,5	6	20,5	26	10	10	NBR	Brass	300	*4 350*	2 000	*4.41*
455-565-068-VS	PUSH-IN FITT. WEDK 6-R1/4K FPM	6	R 1/4	12,5	11	24,5	26	14	10	NBR	Brass	300	*4 350*	2 900	*6.39*

Locking pin

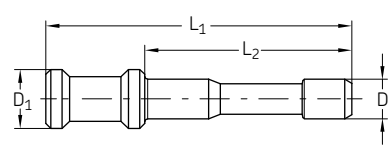

Order number	Designation	Tube Ø	D_1	L_1	L_2	Material	Operating pressure max.		Weight (100 pcs)	
		mm	mm	mm	mm		bar	*psi*	g	*lb*
450-204-002	CLOSURE PLUG D4 MS FOR PUSH-IN FITT.	4	6	31	21	Brass	300	*4 350*	300	*0.66*
450-206-002	CLOSURE PLUG D6 MS FOR PUSH-IN FITT.	6	8	37	25	Brass	300	*4 350*	800	*1.76*

Manifolds

Description

Manifolds are designed for the installation of one or several metering devices, restrictors or lubrication point lines and enable direct main line connection. They are often used with the 341, 351 and 361 series single-line metering devices or VD screw-in flow restrictors. Manifolds are available for various main-line connections, such as M8×1, M10×1 and M14×1.5 threads. The number of outlet ports varies from 1 to 10 (on request up to 20) with threads of M8×1 and M10×1. The seal is made via an O-ring or sealing washer (copper).

Features and benefits

- Wide selection of connection options and variants
- Available in aluminum; galvanized steel available on request
- Easy and quick system extension/reduction

Applications

- Automotive Industry
- General industry
- Machine tools
- Etc.

Metering device manifolds

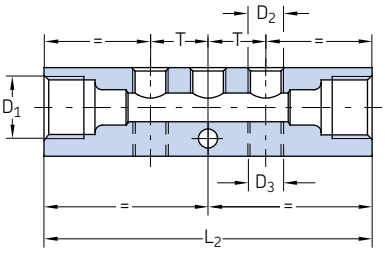

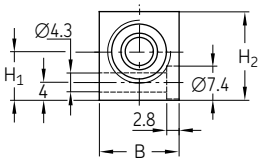

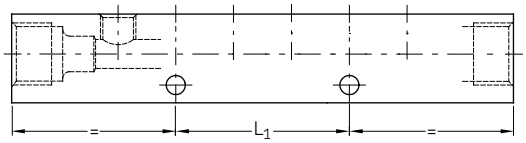

Order number	Designation	Main tube Ø	D_1	D_2 above	D_3 below	L_1	L_2	H_1	H_2	B	T	Material	Weight	
		mm	mm	mm	mm	mm	mm	mm	mm	mm	mm		g	*lb*
VL-01EAM3	MET.DEV.BAR,AL M10x1 1x M10x1	6	M10×1	1x M10×1	–	–	41	11	20	18	–	Aluminum alloy	40	*0.09*
VL-02EAM3	MET.DEV.BAR,AL M10x1 2x M10x1	6	M10×1	2x M10×1	–	–	58	11	20	18	17	Aluminum alloy	50	*0.11*
VL-03EAM3	MET.DEV.BAR,AL M10x1 3x M10x1	6	M10×1	3x M10×1	–	–	75	11	20	18	17	Aluminum alloy	60	*0.13*
VL-04EAM3	MET.DEV.BAR,AL M10x1, 4x M10x1	6	M10×1	4x M10×1	–	34	92	11	20	18	17	Aluminum alloy	78	*0.17*
VL-05EAM3	MET.DEV.BAR,AL M10x1 5x M10x1	6	M10×1	5x M10×1	–	51	109	11	20	18	17	Aluminum alloy	90	*0.20*
VL-06EAM3	MET.DEV.BAR,AL M10x1 6x M10x1	6	M10×1	6x M10×1	–	68	126	11	20	18	17	Aluminum alloy	100	*0.22*
VL-08EAM3	MET.DEV.BAR,AL M10x1 8x M10x1	6	M10×1	8x M10×1	–	52	160	11	20	18	17	Aluminum alloy	135	*0.30*
VL-10EAM3	MET.DEV.BAR,AL M10x1 10x M10x1	6	M10×1	10x M10×1	–	136	194	11	20	18	17	Aluminum alloy	162	*0.36*
322-861	MET.DEV.BAR,AL M10x1 2x1x M10x1	6	M10×1	1x M10×1	1x M10×1	–	41	11	20	18	–	Aluminum alloy	30	*0.07*
324-861	MET.DEV.BAR,AL M10x1 2x2x M10x1	6	M10×1	2x M10×1	2x M10×1	–	58	11	20	18	18	Aluminum alloy	50	*0.11*
326-663	MET.DEV.BAR,AL M10x1 2x3x M10x1	6	M10×1	3x M10×1	3x M10×1	52	77	11	17	18	18	Aluminum alloy	60	*0.13*
328-861	MET.DEV.BAR,AL M10x1 2x4x M10x1	6	M10×1	4x M10×1	4x M10×1	34	92	11	20	18	18	Aluminum alloy	70	*0.15*
330-861	MET.DEV.BAR,AL M10x1 2x5x M10x1	6	M10×1	5x M10×1	5x M10×1	51	109	11	20	18	18	Aluminum alloy	80	*0.18*
332-861	MET.DEV.BAR,AL M10x1 2x6x M10x1	6	M10×1	6x M10×1	6x M10×1	68	126	11	20	18	18	Aluminum alloy	96	*0.21*
334-861	MET.DEV.BAR,AL M10x1 2x7x M10x1	6	M10×1	7x M10×1	7x M10×1	85	143	11	20	18	18	Aluminum alloy	108	*0.24*
336-861	MET.DEV.BAR,AL M10x1 2x8x M10x1	6	M10×1	8x M10×1	8x M10×1	102	160	11	20	18	18	Aluminum alloy	128	*0.28*
338-861	MET.DEV.BAR,AL M10x1 2x9x M10x1	6	M10×1	9x M10×1	9x M10×1	119	177	11	20	18	18	Aluminum alloy	137	*0.30*
340-861	MET.DEV.BAR,AL M10x1 2x10x M10x1	6	M10×1	10x M10×1	10x M10×1	136	194	11	20	18	18	Aluminum alloy	140	*0.31*
VL-01DAM3	MET.DEV.BAR,AL M10x1 1x M8x1	6	M10×1	1X M8×1	–	–	39	10,5	17	13	–	Aluminum alloy	20	*0.04*
VL-02DAM3	MET.DEV.BAR,AL M10x1 2x M8x1	6	M10×1	2x M8×1	–	–	52	10,5	17	13	13	Aluminum alloy	30	*0.07*
VL-03DAM3	MET.DEV.BAR,AL M10x1 1x M8x1	6	M10×1	3x M8×1	–	–	65	10,5	17	13	13	Aluminum alloy	30	*0.07*
VL-04DAM3	MET.DEV.BAR,AL M10x1 3x M8x1	6	M10×1	4x M8×1	–	–	78	10,5	17	13	13	Aluminum alloy	38	*0.08*
VL-05DAM3	MET.DEV.BAR,AL M10x1 4x M8x1	6	M10×1	5x M8×1	–	–	91	10,5	17	13	13	Aluminum alloy	40	*0.09*
VL-06DAM3	MET.DEV.BAR,AL M10x1 6x M8x1	6	M10×1	6x M8×1	–	52	104	11	20	18	13	Aluminum alloy	50	*0.11*
VL-08DAM3	MET.DEV.BAR,AL M10x1 8x M8x1	6	M10×1	8x M8×1	–	52	130	10,5	17	13	13	Aluminum alloy	65	*0.14*
VL-10DAM3	MET.DEV.BAR,AL M10x1 10x M8x1	6	M10×1	10x M8×1	–	78	156	10,5	17	13	13	Aluminum alloy	80	*0.18*
321-581	MET.DEV.BAR,AL M14x1,5 1x M8x1	8	M14×1,5	1x M8×1	–	–	48	–	20	18	–	Aluminum alloy	40	*0.09*
322-581	MET.DEV.BAR,AL M14x1,5 2x M8x1	8	M14×1,5	2x M8×1	–	–	61	11	20	18	13	Aluminum alloy	47	*0.10*
323-581	MET.DEV.BAR,AL M14x1,5 3x M8x1	8	M14×1,5	3x M8×1	–	–	74	11	20	18	13	Aluminum alloy	50	*0.11*
324-581	MET.DEV.BAR,AL M14x1,5, 4x M8x1	8	M14×1,5	4x M8×1	–	–	87	11	20	18	13	Aluminum alloy	55	*0.12*
325-581	MET.DEV.BAR,AL M14x1,5 5x M8x1	8	M14×1,5	5x M8×1	–	–	74	11	20	18	13	Aluminum alloy	70	*0.15*
326-581	MET.DEV.BAR,AL M14x1,5 6x M8x1	8	M14×1,5	6x M8×1	–	39	113	11	20	18	13	Aluminum alloy	90	*0.20*
328-581	MET.DEV.BAR,AL M14x1,5 8x M8x1	8	M14×1,5	8x M8×1	–	65	139	11	20	18	13	Aluminum alloy	110	*0.24*
330-581	MET.DEV.BAR,AL M14x1,5 10x M8x1	8	M14×1,5	10x M8x1	–	91	165	11	20	18	13	Aluminum alloy	135	*0.30*

Tubes and hoses

Description

Pipe and hose lines are an important connecting element in all lubrication systems. The lubricant is transported by them from the pump via the metering device to the lubrication points.

The following chapter lists the suitable pipe and hose material for all SKF lubrication systems.

This criteria must be considered when selecting:

- Pipe dimension (inside diameter and wall thickness): Selection according to the occurring pressures and pressure drops
- Material or surface protection of the steel pipes

Material for steel pipes: precision hydraulic pipe seamless to EN 10305-4 in galvanized Cr-6-free or stainless steel material 1.4571 for aggressive conditions (sea water, cleaning agents, paper machines).

Material for plastic pipes Polyamide: PA12H (natural, semi-rigid). PA12HL (black, semi-rigid), PA12PH (natural, flexible), PA12PHL (black, flexible).

Features and benefits

- Reliable and long-term lubricant transfer solutions for low-, medium- and high-pressure lubrication systems
- Quick installation as pipes/hoses are prefilled with lubricant
- Wide range of available versions

Applications

- Paper and packaging industry
- Food and beverage industry
- Construction machines
- Agriculture machines
- Oil and gas industry
- Renewable energy
- Material handling
- On-road trucks
- Etc.

Fixing material

SKF offers a wide range of tube-fixing material, such as fixing clips, pipe brackets, cable straps, mounting bases and fixing bolts, which are suitable for tubes typically used in lubrication systems. For more details, please see the chapter on fixing material.

Tools

SKF has a variety of tools that help assemble tubes and hoses in all kinds of systems, such as:

- Tube bending device (for the bending of metal tubes)
- Pipe cutter (for cutting metal tubes and producing a claw groove for quick connection fittings)

For more information, please see the chapter on tools.

Tube protections

SKF offers a range of solutions for tube protection including coils, protective helixes or corrugated hoses. For more details, please see page 103.

Tubes and hoses

Plastic tubing

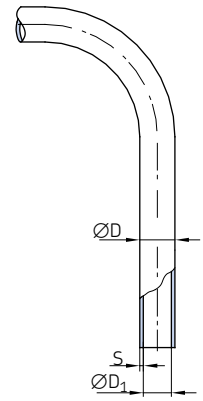

Order number	Designation	Tube outside ØD	Wall thickness S	Min. bending radius [1] R	Burst pressure [2]		Material	Weight (100 m)	
		mm	mm	mm	bar	*psi*		kg	*lb*
Plastic tubing semirigid (without plasticizer)									
WVN715-R02.5X0.5	TUBE,PA12H 2,5x 0,5 NATUR	2,5	0,5	25	198	*2 872*	PA12H	0,33	*0.73*
WVN715-R04X0.85	TUBE,PA12H 4,0x 0,85 NATUR	4	0,85	38	216	*3 132*	PA12H	0,88	*1.94*
WVN715R04X0.85+A89	TUBE,PA12HL 4,0x 0,85 BLACK	4	0,85	38	216	*3 132*	PA12HL	0,88	*1.94*
112-35127-7	TUBE, PA12HL 4,0x 1,0 BLACK	4	1	30	267	*3 872*	PA12HL	0,9	*1.98*
112-35127-5	TUBE,PA12HL 4,0x 1,0 NATUR	4	1	30	267	*3 872*	PA12HL	0,9	*1.98*
WVN715-R06X1	TUBE,PA12H 6,0x 1,0 NATUR	6	1	63	159	*2 306*	PA12H	1,61	*3.55*
WVN715-R06X1.25	TUBE,PA12H 6,0x 1,25 NATUR	6	1,25	63	210	*3 045*	PA12H	1,92	*4.23*
WVN715R06X1.25+A89	TUBE,PA12HL 6,0x 1,25 BLACK	6	1,25	63	210	*3 045*	PA12HL	2,16	*4.76*
112-35127-2	TUBE,PA12HL 6,0x 1,5 BLACK	6	1,5	40	267	*3 872*	PA12HL	2,29	*5.05*
WVN715-R08x1.25	TUBE,PA12H 8,0x 1,25 NATUR	8	1,25	76	147	*2 132*	PA12H	2,73	*6.02*
WVN715-R010X1.5	TUBE,PA12H 10,0x 1,5 NATUR	10	1,5	89	141	*2 045*	PA12H	4,12	*9.08*
WVN715R010X1.5+A89	TUBE,PA12HL 10,0x 1,5 BLACK	10	1,5	89	141	*2 045*	PA12HL	4,12	*9.08*
Plastic tubing flexible (containing plasticizer)									
WVN716-R04X0.85	TUBE,PA12PH 4,0x 0,85 NATUR	4	0,85	38	108	*1 566*	PA12PH	0,53	*1.17*
WVN716R04X0.85+A89	TUBE,PA12PHL 4,0x 0,85 BLACK	4	0,85	38	108	*1 566*	PA12PHL	0,53	*1.17*
112-35225-4	TUBE,PA12PHL 4,0x 1,0 BLACK	4	1	27	132	*1 914*	PA12PHL	0,63	*1.39*
WVN716-R06X1.25	TUBE,PA12PH 6,0x 1,25 NATUR	6	1,25	63	105	*1 522*	PA12PH	2	*4.41*
WVN716R06X1.25+A89	TUBE,PA12PHL 6,0x 1,25 BLACK	6	1,25	63	105	*1 522*	PA12PHL	2	*4.41*
WVN716-R08X1.25	TUBE,PA12PH 8,0x 1,25 NATUR	8	1,25	80	75	*1 087*	PA12PH	2,8	*6.17*

[1] without bending device
[2] the permissible burst pressure is lower at higher temperatures (→ pressure utilization factor table).

Pressure utilization factor

Temperature up to	Pressure efficiency
°C	%
23	100
30	83
40	72
50	64
60	57
70	52
80	47

The pressure utilization factor indicates the percentage utilization of effective stress available in the specified temperature ranges, based on 23 °C.

Technical Data

Material	PA 12 H polyamide 12, semirigid, unplasticized as per DIN 73378, stabilized against heat and aging.	PA 12 HL (black tubing) polyamide 12, semirigid, unplasticized as per DIN 73378, stabilized against light, heat and aging.
	PA 12 PH polyamide 12, flexible, containing plasticizer as per DIN 73378, stabilized against heat and aging.	PA 12 PHL (black tubing) polyamide 12, flexible, containing plasticizer as per DIN 73378, stabilized against light, heat, and aging.
Temperature range	–60 to +80 °C	–60 to +80 °C

Tube and hose protections

Corrugated tube

Spring coil

Plastic helix

Spiral hose slotted

Order number	Designation		∅	Material	Weight	
per linear meter			mm		g	*lb*
Corrugated tube						
982-760-120	TUBE,CORRUGATED PA6 NW8	BLACK	8,4	Polyamide 6, black colour	20	*0.04*
982-760-130	TUBE,CORRUGATED PA6 NW10	BLACK	10	Polyamide 6, black colour	26	*0.06*
982-760-160	TUBE,CORRUGATED PA6 NW12	BLACK	12,3	Polyamide 6, black colour	34	*0.07*
Spring coil						
982-760-122	SPRING COIL DI6,1xD1,2 1.4310		6,1	Stainless steel 1.4310	64	*0.14*
982-760-132	SPRING COIL DI10,6xD1,2 1.4310		10,6	Stainless steel 1.4310	64	*0.14*
982-760-142	SPRING COIL DI13,5xD1,5 1.4310		12,5	Stainless steel 1.4310	64	*0.14*
111-35306-5	SPRING COIL DI17XD1.8 1.4310		17	Stainless steel 1.4310	290	*0.64*
Plastic helix						
113-35075-2	PLASTIC HELIX GR. 6 BLACK		5–20	Polyethylene, black colour	13	*0.03*
113-35075-3	PLASTIC HELIX GR.12 BLACK		9–30	Polyethylene, black colour	48	*0.11*
Spiral hose slotted						
982-760-102	SPIRAL HOSE PP NW8 SLOTTED		6–9	Polypropylene	25	*0.06*
982-760-172	SPIRAL HOSE PP NW15 SLOTTED		10–16	Polypropylene	100	*0.22*

Tubes and hoses

Steel tubing

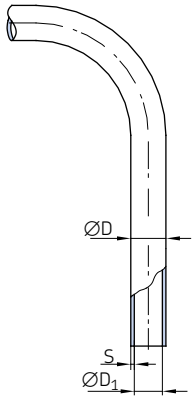

Order number	Designation	ØD	D_1	Material	Operating pressure max.		Weight	
		mm	mm		bar	*psi*	kg/m	*lb/m*
982-120-041	TUBE, E235+N D 4,0x 0,7 CF	4	2,6	Steel tubing, galvanized surface (Cr-6 free)	368	*5 340*	0,063	*0.14*
982-120-040	TUBE, E235+N D 4,0x 1,0 CF	4	2	Steel tubing, galvanized surface (Cr-6 free)	500	*7 250*	0,074	*0.16*
982-120-061	TUBE, E235+N D 6,0x 0,7 CF	6	4,6	Steel tubing, galvanized surface (Cr-6 free)	333	*4 830*	0,12	*0.26*
105-35251-1	TUBE, E235+N D 6,0x 1,0 CF	6	4	Steel tubing, galvanized surface (Cr-6 free)	372	*5 390*	0,123	*0.27*
105-35251-3	TUBE, E235+N D 8,0x 1,0 CF	8	6	Steel tubing, galvanized surface (Cr-6 free)	333	*4 830*	0,173	*0.38*
982-120-100	TUBE, E235+N D 10,0x 1,0 CF	10	8	Steel tubing, galvanized surface (Cr-6 free)	282	*4 090*	0,222	*0.49*
105-35025-5	TUBE, E235+N D 10,0x 1.5 CF	10	7	Steel tubing, galvanized surface (Cr-6 free)	373	*5 410*	0,314	*0.69*
105-35134-3	TUBE, E235+N D 12,0x 1,5 CF	12	9	Steel tubing, galvanized surface (Cr-6 free)	353	*5 120*	0,388	*0.86*
105-35134-9	TUBE, E235+N D 15,0x 1,5 CF	15	12	Steel tubing, galvanized surface (Cr-6 free)	282	*4 090*	0,499	*1.1*
105-35183-3	TUBE, E235+N D 16,0x 2,0 CF	16	12	Steel tubing, galvanized surface (Cr-6 free)	353	*5 120*	0,691	*1.52*
982-120-180	TUBE, E235+N D 18,0x 1,0 CF	18	15	Steel tubing, galvanized surface (Cr-6 free)	157	*2 280*	0,61	*1.35*
105-35134-1	TUBE, E235+N D 20,0x 2,0 CF	20	16	Steel tubing, galvanized surface (Cr-6 free)	282	*4 090*	0,888	*1.96*
105-35308-1	TUBE, E235+N D 28,0x 2,0 CF	28	24	Steel tubing, galvanized surface (Cr-6 free)	201	*2 910*	1,282	*2.83*
105-35134-4	TUBE, E235+N D 30,0x 3,0 CF	30	24	Steel tubing, galvanized surface (Cr-6 free)	282	*4 090*	1,998	*4.41*

Tubes and hoses

Stainless steel tubing

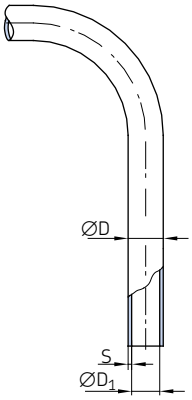

Order number	Designation	ØD	D_1	Material	Operating pressure max.		Weight	
		mm	mm		bar	*psi*	kg/m	*lb/m*
D1127R02.5x0.5+A46	TUBE,NIRO 1.4301 D 2,5x0,5	2,5	1,5	Stainless steel (material 1.4301/1.4306)	386	*5 600*	0,042	*0.09*
DIN2462-R04x1+A46	TUBE,NIRO 1.4301 D 4,0x1,0	4	2	Stainless steel (material 1.4301/1.4306)	466	*6 760*	0,075	*0.17*
106-35203-4	TUBE,NIRO 1.4571 D 6,0x1,0	6	4	Stainless steel 1.4571	426	*6 180*	0,125	*0.28*
106-35203-3	TUBE,NIRO 1.4571 D 8,0x1,0	8	6	Stainless steel 1.4571	368	*5 340*	0,169	*0.37*
DIN2462-R010x1+A46	TUBE,NIRO 1.4301 D 10,0x1,0	10	8	Stainless steel (material 1.4301/1.4306)	231	*3 350*	0,225	*0.5*
106-35203-2	TUBE,NIRO 1.4571 D 10,0x1,5	10	7	Stainless steel 1.4571	389	*5 640*	0,319	*0.7*
106-35203-1	TUBE,NIRO 1.4571 D 20,0x2,0	20	16	Stainless steel 1.4571	294	*4 260*	0,901	*1.99*
106-35292-2	TUBE,NIRO 1.4571 D 22,0x2,0	22	18	Stainless steel 1.4571	267	*3 870*	1,002	*2.21*
106-35292-1	TUBE,NIRO 1.4571 D 28,0x2,0	28	24	Stainless steel 1.4571	210	*3 050*	1,302	*2.87*
106-35203-7	TUBE,NIRO 1.4571 D 30,0x3,0	30	24	Stainless steel 1.4571	294	*4 260*	2,028	*4.47*
106-35231-1	TUBE,NIRO 1.4301 D 6,0x1,0	6	4	Stainless steel 1.4301	400	*5 800*	0,123	*0,27*
106-35231-2	TUBE,NIRO 1.4301 D 8,0x1,0	8	6	Stainless steel 1.4301	310	*4 500*	0,17	*0,37*
106-35231-3	TUBE,NIRO 1.4301 D 10,0x1,5	10	7	Stainless steel 1.4301	365	*5 290*	0,315	*0,69*
106-35231-6	TUBE,NIRO 1.4301 D 20,0x2,0	20	16	Stainless steel 1.4301	253	*3 670*	0,888	*1,96*
106-35267-4	TUBE,NIRO 1.4301 D 22,0x2,0	22	18	Stainless steel 1.4301	232	*3 360*	0,986	*2,17*

Tubes and hoses

Low-pressure hoses for main lines max. 45 bar with pipe stud on both ends

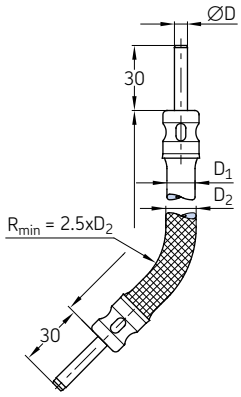

Order number	Designation [1]	Tube ØD	Length	Rubber $ØD_1$	Metal braided D_2	Max. increase in volume at 80 bar	Weight	
		mm	mm	mm	mm	cm³/m	g	*lb*
Low-pressure hoses with pipe stud Ø4 mm								
714-180	HOSE,CR 45 DN 3x 180,STU 4	4	180	11	–	2,5	39	*0.09*
714-220	HOSE,CR 45 DN 3x 220,STU 4	4	220	11	–	2,5	43	*0.09*
714-260	HOSE,CR 45 DN 3x 260,STU 4	4	260	11	–	2,5	48	*0.11*
714-300	HOSE,CR 45 DN 3x 300,STU 4	4	300	11	–	2,5	57	*0.13*
714-380	HOSE,CR 45 DN 3x 380,STU 4	4	380	11	–	2,5	61	*0.13*
714-420	HOSE,CR 45 DN 3x 420,STU 4	4	420	11	–	2,5	70	*0.15*
714-450	HOSE,CR 45 DN 3x 450,STU 4	4	450	11	–	2,5	74	*0.16*
714-500	HOSE,CR 45 DN 3x 500,STU 4	4	500	11	–	2,5	84	*0.19*
714-580	HOSE,CR 45 DN 3x 580,STU 4	4	580	11	–	2,5	92	*0.20*
Low-pressure hoses with pipe stud Ø4 mm and metal braid								
714-180-M	HOSE,CR 45 DN 3x 180,STU 4 MET.BRAID.	4	180	11	12	2,5	56	*0.12*
714-260-M	HOSE,CR 45 DN 3x 260,STU 4 MET.BRAID.	4	260	11	12	2,5	69	*0.15*
714-300-M	HOSE,CR 45 DN 3x 300,STU 4 MET.BRAID.	4	300	11	12	2,5	75	*0.17*
714-400-M	HOSE,CR 45 DN 3x 400,STU 4 MET.BRAID.	4	400	11	12	2,5	97	*0.21*
714-500-M	HOSE,CR 45 DN 3x 500,STU 4 MET.BRAID.	4	500	11	12	2,5	119	*0.26*
714-580-M	HOSE,CR 45 DN 3x 580,STU 4 MET.BRAID.	4	580	11	12	2,5	167	*0.37*
Low-pressure hoses with pipe stud Ø6 mm								
716-220	HOSE,CR 45 DN 4,5x 220,STU 6	6	220	13	–	3,6	64	*0.14*
716-300	HOSE,CR 45 DN 4,5x 300,STU 6	6	300	13	–	3,6	72	*0.16*
716-340	HOSE,CR 45 DN 4,5x 340,STU 6	6	340	13	–	3,6	79	*0.17*
716-380	HOSE,CR 45 DN 4,5x 380,STU 6	6	380	13	–	3,6	86	*0.19*
716-420	HOSE,CR 45 DN 4,5x 420,STU 6	6	420	13	–	3,6	90	*0.20*
716-500	HOSE,CR 45 DN 4,5x 500,STU 6	6	500	13	–	3,6	101	*0.22*
716-580	HOSE,CR 45 DN 4,5x 580,STU 6	6	580	13	–	3,6	128	*0.28*
Low-pressure hoses with pipe stud Ø6 mm and metal braid								
716-300-M	HOSE,CR 45 DN 4,5x 300,STU6 MET.BRAID.	6	300	13	14	3,6	108	*0.24*
716-400-M	HOSE,CR 45 DN 4,5x 400,STU6 MET.BRAID.	6	400	13	14	3,6	140	*0.31*
716-500-M	HOSE,CR 45 DN 4,5x 500,STU6 MET.BRAID.	6	500	13	14	3,6	165	*0.36*
Low-pressure hoses with pipe stud Ø8 mm								
718-340	HOSE,CR 45 DN 6,5x 340,STU 8	8	340	15	–	4,4	117	*0.26*
718-450	HOSE,CR 45 DN 6,5x 450,STU 8	8	450	15	–	4,4	133	*0.29*
718-580	HOSE,CR 45 DN 6,5x 580,STU 8	8	580	15	–	4,4	141	*0.31*
Low-pressure hoses with pipe stud Ø8 mm and metal braid								
718-400-M	HOSE,CR 45 DN 6,5x 400,STU 8 MET.BRAID.	8	400	15	16	4,4	136	*0.30*
718-500-M	HOSE,CR 45 DN 6,5x 500,STU 8 MET.BRAID.	8	500	15	16	4,4	174	*0.38*

[1] Material hose: mineral oil resistant CR rubber inside; 2 layers of braided rayon, outside rubber conditionally oil resistant, resistant to light cracks and ozone.
Material metal braid: galvanized steel wire; tube ends: galvanized steel pipe.

Low-pressure hoses for main lines max. 45 bar with tapered sleeve and socket union on both ends

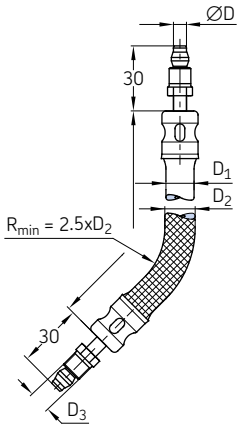

Order number	Designation [1]	Tube ØD	Length	Rubber $ØD_1$	Metal braided D_2	Thread D_3	Max. increase in volume at 80 bar	Weight	
		mm	mm	mm	mm	mm	cm³/m	g	*lb*
Low-pressure hoses with tapered sleeve socket union									
714-180-K	HOSE,CR 45 DN 3x 180,M8x1	4	180	11	–	M8×1	2,5	*45*	*0.10*
714-220-K	HOSE,CR 45 DN 3x 220,M8x1	4	220	11	–	M8×1	2,5	*49*	*0.11*
714-260-K	HOSE,CR 45 DN 3x 260,M8x1	4	260	11	–	M8×1	2,5	*53*	*0.12*
714-300-K	HOSE,CR 45 DN 3x 300,M8x1	4	300	11	–	M8×1	2,5	*59*	*0.13*
714-380-K	HOSE,CR 45 DN 3x 380,M8x1	4	380	11	–	M8×1	2,5	*68*	*0.15*
714-420-K	HOSE,CR 45 DN 3x 420,M8x1	4	420	11	–	M8×1	2,5	*76*	*0.17*
714-450-K	HOSE,CR 45 DN 3x 450,M8x1	4	450	11	–	M8×1	2,5	*84*	*0.19*
714-500-K	HOSE,CR 45 DN 3x 500,M8x1	4	500	11	–	M8×1	2,5	*90*	*0.20*
714-580-K	HOSE,CR 45 DN 3x 580,M8x1	4	580	11	–	M8×1	2,5	*100*	*0.22*
Low-pressure hoses with tapered sleeve socket union and metal braid									
714-180-MK	HOSE,CR 45 DN 3x 180,M8x1 MET.BRAID.	4	180	11	12	M8×1	2,5	63	*0.14*
714-260-MK	HOSE,CR 45 DN 3x 260,M8x1 MET.BRAID.	4	260	11	12	M8×1	2,5	80	*0.18*
714-300-MK	HOSE,CR 45 DN 3x 300,M8x1 MET.BRAID.	4	300	11	12	M8×1	2,5	85	*0.19*
714-400-MK	HOSE,CR 45 DN 3x 400,M8x1 MET.BRAID.	4	400	11	12	M8×1	2,5	110	*0.24*
714-500-MK	HOSE,CR 45 DN 3x 500,M8x1 MET.BRAID.	4	500	11	12	M8×1	2,5	120	*0.26*
714-580-MK	HOSE,CR 45 DN 3x 580,M8x1 MET.BRAID.	4	580	11	12	M8×1	2,5	140	*0.31*
Low-pressure hoses with tapered sleeve socket union									
716-220-K	HOSE,CR 45 DN 4,5x 220,M10x1	6	220	13	–	M10×1	3,6	68	*0.15*
716-300-K	HOSE,CR 45 DN 4,5x 300,M10x1	6	300	13	–	M10×1	3,6	80	*0.18*
716-340-K	HOSE,CR 45 DN 4,5x 340,M10x1	6	340	13	–	M10×1	3,6	85	*0.19*
716-380-K	HOSE,CR 45 DN 4,5x 380,M10x1	6	380	13	–	M10×1	3,6	92	*0.20*
716-420-K	HOSE,CR 45 DN 4,5x 420,M10x1	6	420	13	–	M10×1	3,6	98	*0.22*
716-500-K	HOSE,CR 45 DN 4,5x 500,M10x1	6	500	13	–	M10×1	3,6	113	*0.25*
716-580-K	HOSE,CR 45 DN 4,5x 580,M10x1	6	580	13	–	M10×1	3,6	127	*0.28*
Low-pressure hoses with tapered sleeve socket union and metal braid									
716-300-MK	HOSE,CR 45 DN 4,5x 300,M10x1 MET.BRAID.	6	300	13	14	M10×1	3,6	110	*0.24*
716-400-MK	HOSE,CR 45 DN 4,5x 400,M10x1 MET.BRAID.	6	400	13	14	M10×1	3,6	140	*0.31*
716-450-MK	HOSE,CR 45 DN 4,5x 450,M10x1 MET.BRAID.	6	450	13	14	M10×1	3,6	160	*0.35*
716-500-MK	HOSE,CR 45 DN 4,5x 500,M10x1 MET.BRAID.	6	500	13	14	M10×1	3,6	180	*0.40*
Low-pressure hoses with tapered sleeve socket union									
718-400-K	HOSE,CR 45 DN 6,5x 400,M14x1,5	8	340	15	–	M14×1,5	4,4	116	*0.26*
718-450-K	HOSE,CR 45 DN 6,5x 450,M14x1,5	8	450	15	–	M14×1,5	4,4	147	*0.32*
718-500-K	HOSE,CR 45 DN 6,5x 500,M14x1,5	8	580	15	–	M14×1,5	4,4	164	*0.36*
Low-pressure hoses with tapered sleeve socket union and metal braid									
718-400-MK	HOSE,CR 45 DN6,5x 400,M14x1,5 MET.BRAID.	8	400	15	16	M14×1,5	4,4	160	*0.35*
718-450-MK	HOSE,CR 45 DN6,5x 450,M14x1,5 MET.BRAID.	8	450	15	16	M14×1,5	4,4	195	*0.43*
718-500-MK	HOSE,CR 45 DN6,5x 500,M14x1,5 MET.BRAID.	8	500	15	16	M14×1,5	4,4	221	*0.49*

[1] Material hose: mineral oil resistant CR rubber inside; 2 layers of braided rayon, outside rubber conditionally oil resistant, resistant to light cracks and ozone.
Material metal braid: galvanized steel wire; tube ends: galvanized steel tubing.

Low-pressure hoses for main lines max. 45 bar with pipe stud on both ends and with claw groove for quick connectors

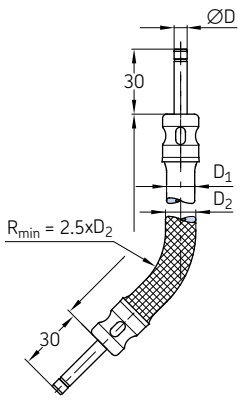

Order number	Designation [1]	Tube ØD	Length	Rubber $ØD_1$	Metal braided D_2	Max. increase in volume at 80 bar	Weight	
		mm	mm	mm	mm	cm³/m	g	*lb*
Low-pressure hoses with pipe stud Ø4 mm with claw groove for quick connectors								
714-180-VS	HOSE,CR 45 DN 3x 180,VS	4	180	11	–	2,5	39	*0.09*
714-220-VS	HOSE,CR 45 DN 3x 220,VS	4	220	11	–	2,5	43	*0.09*
714-260-VS	HOSE,CR 45 DN 3x 260,VS	4	260	11	–	2,5	48	*0.11*
714-300-VS	HOSE,CR 45 DN 3x 300,VS	4	300	11	–	2,5	57	*0.13*
714-380-VS	HOSE,CR 45 DN 3x 380,VS	4	380	11	–	2,5	61	*0.13*
714-420-VS	HOSE,CR 45 DN 3x 420,VS	4	420	11	–	2,5	70	*0.15*
714-450-VS	HOSE,CR 45 DN3x 450,VS	4	450	11	–	2,5	74	*0.16*
714-500-VS	HOSE,CR 45 DN 3x 500,VS	4	500	11	–	2,5	84	*0.19*
714-580-VS	HOSE,CR 45 DN 3x 580,VS	4	580	11	–	2,5	92	*0.20*
Low-pressure hoses with pipe stud Ø4 mm with claw groove for quick connectors and metal braid								
714-180-M-VS	HOSE,CR 45 DN 3x 180,VS MET.BRAID.	4	180	11	12	2,5	56	*0.12*
714-260-M-VS	HOSE,CR 45 DN 3x 260,VS MET.BRAID.	4	260	11	12	2,5	69	*0.15*
714-300-M-VS	HOSE,CR 45 DN 3x 300,VS MET.BRAID.	4	300	11	12	2,5	75	*0.17*
714-400-M-VS	HOSE,CR 45 DN 3x 400,VS MET.BRAID.	4	400	11	12	2,5	97	*0.21*
714-500-M-VS	HOSE,CR 45 DN 3x 500,VS MET.BRAID.	4	500	11	12	2,5	119	*0.26*
714-580-M-VS	HOSE,CR 45 DN 3x 580,VS MET.BRAID.	4	580	11	12	2,5	167	*0.37*
Low-pressure hoses with pipe stud Ø6 mm with claw groove for quick connectors								
716-220-VS	HOSE,CR 45 DN 4,5x 220,VS	6	220	13	–	3,6	64	*0.14*
716-300-VS	HOSE,CR 45 DN 4,5x 300,VS	6	300	13	–	3,6	72	*0.16*
716-380-VS	HOSE,CR 45 DN 4,5x 380,VS	6	380	13	–	3,6	86	*0.19*
716-420-VS	HOSE,CR 45 DN 4,5x 420,VS	6	420	13	–	3,6	90	*0.20*
716-500-VS	HOSE,CR 45 DN 4,5x 500,VS	6	500	13	–	3,6	101	*0.22*
716-580-VS	HOSE,CR 45 DN 4,5x 580,VS	6	580	13	–	3,6	128	*0.28*
Low-pressure hoses with pipe stud Ø6 mm with claw groove for quick connectors and metal braid								
716-300-M-VS	HOSE,CR 45 DN 4,5x 300,VS MET.BRAID.	6	300	13	14	3,6	108	*0.24*
716-400-M-VS	HOSE,CR 45 DN 4,5x 400,VS MET.BRAID.	6	400	13	14	3,6	140	*0.31*
716-450-M-VS	HOSE,CR 45 DN 4,5x 450,VS MET.BRAID.	6	450	13	14	3,6	155	*0.34*
716-500-M-VS	HOSE,CR 45 DN 4,5x 500,VS MET.BRAID.	6	500	13	14	3,6	165	*0.36*
Low-pressure hoses with pipe stud Ø8 mm with claw groove for quick connectors								
718-340-VS	HOSE,CR 45 DN 6,5x 340,VS	8	340	15	–	4,4	117	*0.26*
718-450-VS	HOSE,CR 45 DN 6,5x 450,VS	8	450	15	–	4,4	133	*0.29*
718-580-VS	HOSE,CR 45 DN 6,5x 580,VS	8	580	15	–	4,4	141	*0.31*
Low-pressure hoses with pipe stud Ø8 mm with claw groove for quick connectors and metal braid								
718-400-M-VS	HOSE,CR 45 DN 6,5x 400,VS MET.BRAID.	8	400	15	16	4,4	136	*0.30*
718-450-M-VS	HOSE,CR 45 DN 6,5x 450,VS MET.BRAID.	8	450	15	16	4,4	157	*0.35*
718-500-M-VS	HOSE,CR 45 DN 6,5x 500,VS MET.BRAID.	8	500	15	16	4,4	174	*0.38*

[1] Material hose: mineral oil resistant CR rubber inside; 2 layers of braided rayon, outside rubber conditionally oil resistant, resistant to light cracks and ozone.
Material metal braid: galvanized steel wire; tube ends: galvanized steel pipe.

Low-pressure hoses for secondary lines max. 15 bar with pipe stud on both ends

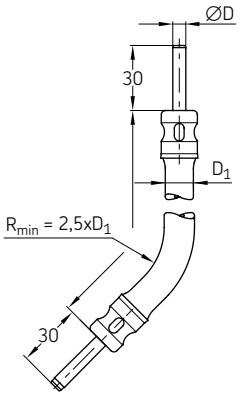

Order number	Designation [1]	Tube ØD	Length	Rubber $ØD_1$	Weight	
		mm	mm	mm	g	*lb*
734-180	HOSE,CR 15 DN 3x 180,STU 4	4	180	8,8	30	*0,07*
734-220	HOSE,CR 15 DN 3x 220,STU 4	4	220	8,8	33	*0,07*
734-260	HOSE,CR 15 DN 3x 260,STU 4	4	260	8,8	37	*0,08*
734-300	HOSE,CR 15 DN 3x 300,STU 4	4	300	8,8	40	*0,09*
734-380	HOSE,CR 15 DN 3x 380,STU 4	4	380	8,8	45	*0,10*
734-420	HOSE,CR 15 DN 3x 420,STU 4	4	420	8,8	47	*0,10*
734-450	HOSE,CR 15 DN 3x 450,STU 4	4	450	8,8	48	*0,11*
734-500	HOSE,CR 15 DN 3x 500,STU 4	4	500	8,8	58	*0,13*
734-580	HOSE,CR 15 DN 3x 580,STU 4	4	580	8,8	61	*0,13*

[1] Material hose: mineral oil resistant CR rubber inside; 2 layers of braided rayon, outside rubber conditionally oil resistant, resistant to light cracks and ozone.
Material metal braid: galvanized steel wire; tube ends: galvanized steel pipe.

Low-pressure hoses for secondary lines max. 15 bar with tapered sleeve and socket union on both ends

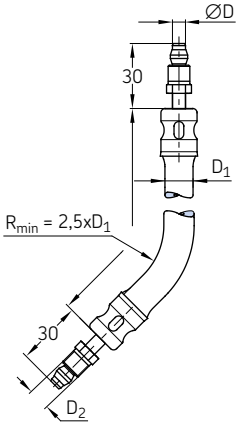

Order number	Designation [1]	Tube ØD	Length	Rubber $ØD_1$	Thread $ØD_2$	Weight	
		mm	mm	mm	mm	g	*lb*
734-180-K	HOSE,CR 15 DN 3x 180,M8x1	4	180	8,8	M8×1	36	*0.08*
734-220-K	HOSE,CR 15 DN 3x 220,M8x1	4	220	8,8	M8×1	41	*0.09*
734-260-K	HOSE,CR 15 DN 3x 260,M8x1	4	260	8,8	M8×1	44	*0.10*
734-300-K	HOSE,CR 15 DN 3x 300,M8x1	4	300	8,8	M8×1	46	*0.10*
734-380-K	HOSE,CR 15 DN 3x 380,M8x1	4	380	8,8	M8×1	51	*0.11*
734-420-K	HOSE,CR 15 DN 3x 420,M8x1	4	420	8,8	M8×1	53	*0.12*
734-450-K	HOSE,CR 15 DN 3x 450,M8x1	4	450	8,8	M8×1	56	*0.12*
734-500-K	HOSE,CR 15 DN 3x 500,M8x1	4	500	8,8	M8×1	60	*0.13*
734-580-K	HOSE,CR 15 DN 3x 580,M8x1	4	580	8,8	M8×1	68	*0.15*

[1] Material hose: mineral oil resistant CR rubber inside; 2 layers of braided rayon, outside rubber conditionally oil resistant, resistant to light cracks and ozone.
Material metal braid: galvanized steel wire; tube ends: galvanized steel pipe.

Low-pressure hoses for secondary lines max. 15 bar with pipe stud on both ends and claw groove for quick connectors

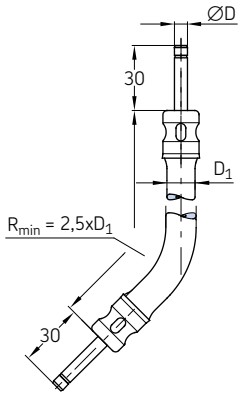

Order number	Designation [1]	Tube ØD	Length	Rubber $ØD_1$	Weight	
		mm	mm	mm	g	*lb*
734-180-VS	HOSE,CR 15 DN 3x 180,VS	4	180	8,8	30	*0.07*
734-220-VS	HOSE,CR 15 DN 3x 220,VS	4	220	8,8	33	*0.07*
734-260-VS	HOSE,CR 15 DN 3x 260,VS	4	260	8,8	37	*0.08*
734-300-VS	HOSE,CR 15 DN 3x 300,VS	4	300	8,8	40	*0.09*
734-380-VS	HOSE,CR 15 DN 3x 380,VS	4	380	8,8	45	*0.10*
734-420-VS	HOSE,CR 15 DN 3x 420,VS	4	420	8,8	47	*0.10*
734-450-VS	HOSE,CR 15 DN 3x 450,VS	4	450	8,8	48	*0.11*
734-500-VS	HOSE,CR 15 DN 3x 500,VS	4	500	8,8	58	*0.13*
734-580-VS	HOSE,CR 15 DN 3x 580,VS	4	580	8,8	61	*0.13*

[1] Material hose: mineral oil resistant CR rubber inside; 2 layers of braided rayon, outside rubber conditionally oil resistant, resistant to light cracks and ozone.
Material metal braid: galvanized steel wire; tube ends: galvanized steel pipe.

Low-pressure hoses suitable for self-installation max. 45 bar

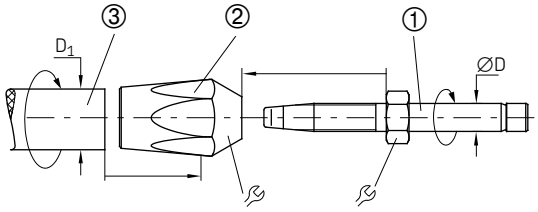

Order number	Designation	Tube ØD	D_1		Material	Max. increase in volume ~ 40 bar	Weight	
		mm	mm	mm		cm³/m	g	*lb*
① Hose coupling								
406-704-001	HOSE COUPLING STRAIGHT D4 BEL	–	–	8	Steel, galvanized	1	7	*0.01*
406-706-001	HOSE COUPLING STRAIGHT D6 BEL	–	–	10	Steel, galvanized	1,4	11	*0.02*
406-708-001	HOSE COUPLING STRAIGHT D8 BEL	–	–	13	Steel, galvanized	1,4	21	*0.04*
406-704-001-VS 1)	HOSE COUPLING STRAIGHT D4 VS	–	–	8	Steel, galvanized	1	7	*0.01*
406-706-001-VS 1)	HOSE COUPLING STRAIGHT D6 VS	–	–	10	Steel, galvanized	1,4	11	*0.02*
406-708-001-VS 1)	HOSE COUPLING STRAIGHT D8 VS	–	–	13	Steel, galvanized	1,4	21	*0.04*
② Threaded sleeve								
406-804-001	THREADED SLEEVE F.HOSE STUD D4	–	–	14	Brass	1	20	*0.04*
406-806-001	THREADED SLEEVE F.HOSE STUD D6	–	–	17	Brass	1,4	31	*0.07*
406-808-001	THREADED SLEEVE F.HOSE STUD D8	–	–	19	Brass	1,4	36	*0.08*
③ Hose								
WVN701-4 2)	HOSE,CR 45 DN 3	4	11	–	Perbunan, braided rayon	1	117	*0.26*
WVN701-6 2)	HOSE,CR 45 DN 4,5	6	13	–	Perbunan, braided rayon	1,4	153	*0.34*
WVN701-8 2)	HOSE,CR 45 DN 6,5	8	15	–	Perbunan, braided rayon	1,4	190	*0.42*

1) VS = version with claw groove on tube ends for quick connectors
2) Please quote length when ordering. Max. length available 20 m
3) Perbunan, resistant to mineral oils, with two layers of braided rayon

Permissible operating pressure: –40 to +100 °C / *–40 to +212 °F*

Low-pressure hose assignment guide
(products in one and the same line below are combinable)

Hose coupling	Coupling type	ØD	Threaded sleeve	High-pressure hose	Operating pressure	
		mm			bar	*psi*
406-704-001	straight	4	**406-804-001**	**WVN701-4**	45	*653*
406-704-001-VS	straight	4	**406-804-001**	**WVN701-4**	45	*653*
406-706-001	straight	6	**406-806-001**	**WVN701-6**	45	*653*
406-706-001-VS	straight	6	**406-806-001**	**WVN701-6**	45	*653*
406-708-001	straight	8	**406-808-001**	**WVN701-8**	45	*653*
406-708-001-VS	straight	8	**406-808-001**	**WVN701-8**	45	*653*

Important note
To avoid damage, screw all parts only up to the stop. Do not tighten!

Installation notes

1. Apply thin film of oil to inner hose end, inner threaded sleeve and outer house coupling end.
2. Screw threaded sleeve onto hose end up to the stop.
3. Clamp threaded sleeve in vise and screw in hose coupling turning it to the left up to the stop.

Tubes and hoses

High-pressure hoses for self-installation

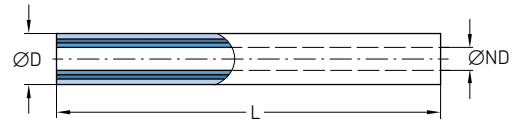

Order number [1]	Designation	Tube ØD	Nominal diameter ND	Length	Material hose	Burst pressure		Weight	
		mm	mm	m		bar	*psi*	g	*lb*
111-35114-1	HOSE PL300 NW4,0 HIGHFLEXIBLE	8,6	4	1	Polyamide, polyurethane [2]	840	*12 183*	50	*0.110*
1110-00000002	HP HOSE 8,6/4,1-PA6/PUR-BK COIL50M	8,6	4	50	Polyamide, polyurethane [2]	840	*12 183*	2 500	*5.511*
982-750-111	HOSE, PL400 NW6,0 HIGHFLEXIBLE	11,2	6	1	Polyamide, polyurethane [2]	840	*12 183*	76	*0.167*
1110-00000001	HP HOSE 11,3/6,4-PA6/PUR-BK COIL50M	11,2	6	50	Polyamide, polyurethane [2]	840	*12 183*	3 780	*8.333*
WVN711-10	HOSE, 3TE,NW8,0 HIGHFLEXIBLE	16,5	8	1	Synthetic rubber [2]	520	*7 542*	300	*0.661*

[1] Hoses can be delivered prefilled wiht lurbicant on request.
[2] Inner hose = polyamide,soft; pressure reinforcement = polyester high strength; sheathing = polyurethane

Scheme - High-pressure hose self-mounting components

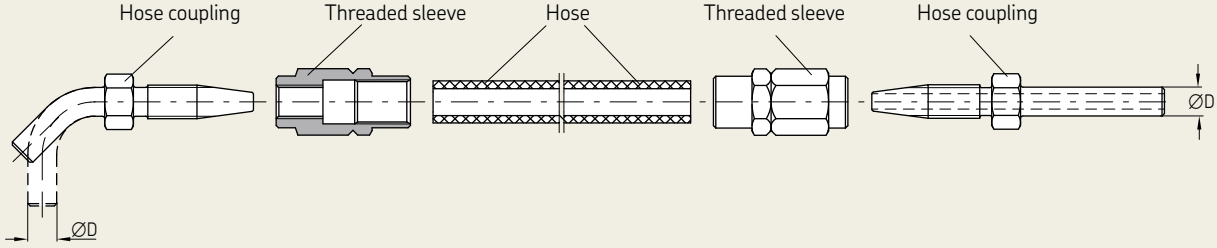

High-pressure hoses and threaded joints assignment guide
(products in one and the same line below are combinable)

Hose coupling [1]	Coupling type	ØD	Threaded sleeve	High-pressure hose	Burst pressure	
		mm			bar	*psi*
853-380-006-VS	straight	4	**853-540-010**	**111-35114-1**	840	*12 183*
853-370-002(-VS)	straight	6	**853-540-010**	**111-35114-1**	840	*12 183*
853-380-002(-VS)	straight	6	**853-540-010**	**111-35114-1**	840	*12 183*
853-390-002(-VS)	straight	6	**853-540-010**	**111-35114-1**	840	*12 183*
853-380-003(-VS)	90°	6	**853-540-010**	**111-35114-1**	840	*12 183*
853-390-003(-VS)	90°	6	**853-540-010**	**111-35114-1**	840	*12 183*
853-380-004(-VS)	45°	6	**853-540-010**	**111-35114-1**	840	*12 183*
853-380-005-VS	straight	6	**853-540-010**	**111-35114-1**	840	*12 183*
853-390-005	straight	6	**853-540-010**	**111-35114-1**	840	*12 183*
853-380-007-VS	45°	6	**853-540-010**	**111-35114-1**	840	*12 183*
456-706-001	straight	6	**853-540-010**	**111-35114-1**	840	*12 183*
855-380-002	straight	6	**853-540-010**	**111-35114-1**	840	*12 183*
406-708-005(-VS)	straight	8	**406-808-005**	**982-750-111**	840	*12 183*
406-710-002	straight	10	**406-810-002**	**WVN711-10**	520	*7 542*

[1] 000-000-000(-VS) means both versions 000-000-000 and 000-000-000-VS.
To identify hose coupling design details, please see table on page 113.

Important note
To avoid damage, screw all parts only up to the stop. Do not tighten!

Installation notes

1. Apply thin film of oil to inner hose end, inner threaded sleeve and outer house coupling end.
2. Screw threaded sleeve onto hose end up to the stop.
3. Clamp threaded sleeve in vise and screw in hose coupling turning it to the left up to the stop.

Threaded joints for high-pressure hoses

Threaded sleeve

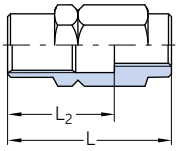

Hose coupling straight

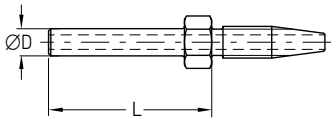

Hose coupling bent

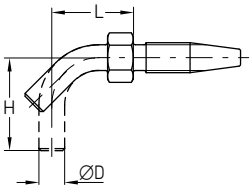

Order number	Designation	ØD	L	L_2	H	Material	Weight	
		mm	mm	mm	mm		g	*lb*
Threaded sleeves								
853-540-010	THREADED SLEEVE F.HOSE STUD D 6	6	28	17	–	Zinc-nickel, Cr-6-free	12	*0.26*
432-23031-1	THREADED SLEEVE F.HOSE STUD D 6	6	28	19	–	Zinc-nickel, Cr-6-free	19	*0.04*
406-808-005	THREADED SLEEVE F.HOSE STUD D 8	8	35	23	–	Zinc-nickel, Cr-6-free	34	*0.07*
406-810-002	THREADED SLEEVE F.HOSE STUD D10	10	41	32	–	Zinc-nickel, Cr-6-free	47	*0.10*
432-23676-1	THREADED SLEEVE F.HOSE STUD D6 VA	6	28	17	–	Stainless steel 1.4305	12	*0.26*
406-808-005-S3	THREADED SLEEVE F.HOSE STUD D 8 VA	8	35	23	–	Stainless steel 1.4571	34	*0.07*
Hose studs with claw grooves for quick connectors								
853-380-006-VS	HOSE STUD STRAIGHT D4/NW2 VS	4	39	–	–	Zinc-nickel, Cr-6-free	12	*0.26*
853-370-002-VS	HOSE STUD STRAIGHT D6/NW4 VS	6	32	–	–	Zinc-nickel, Cr-6-free	12	*0.26*
853-380-002-VS	HOSE STUD STRAIGHT D6/NW4 VS	6	39	–	–	Zinc-nickel, Cr-6-free	12	*0.26*
853-380-005-VS	HOSE STUD STRAIGHT D6/NW4 VS	6	49	–	–	Zinc-nickel, Cr-6-free	14	*0.03*
853-390-002-VS	HOSE STUD STRAIGHT D6/NW4 VS	6	75	–	–	Zinc-nickel, Cr-6-free	18	*0.03*
853-390-006-VS	HOSE STUD 10DEGREE D6/NW4 VS	6	70	–	10	Zinc-nickel, Cr-6-free	18	*0.03*
853-390-005-VS	HOSE STUD 30DEGREE D6/NW4 VS	6	70	–	17	Zinc-nickel, Cr-6-free	19	*0.04*
853-380-004-VS	HOSE STUD 45DEGREE D6/NW4 VS	6	40	–	23	Zinc-nickel, Cr-6-free	14	*0.03*
853-380-007-VS	HOSE STUD 45DEGREE D6/NW4 VS	6	65	–	18	Zinc-nickel, Cr-6-free	19	*0.04*
853-390-004-VS	HOSE STUD 45DEGREE D6/NW4 VS	6	65	–	24	Zinc-nickel, Cr-6-free	19	*0.04*
853-380-003-VS	HOSE STUD 90DEGREE D6/NW4 VS	6	19	–	35	Zinc-nickel, Cr-6-free	14	*0.03*
853-390-003-VS	HOSE STUD 90DEGREE D6/NW4 VS	6	30	–	50	Zinc-nickel, Cr-6-free	19	*0.04*
406-708-005-VS	HOSE STUD STRAIGHT D8/NW6 VS	8	39	–	–	Zinc-nickel, Cr-6-free	21	*0.05*
855-380-002-VS	HOSE STUD VA STRAIGHT D6/NW4 VS	6	39	–	–	Stainless steel 1.4571	12	*0.26*
855-380-003-VS	HOSE STUD VA 90DEGREE D6/NW4 VS	6	19	–	35	Stainless steel 1.4305	13	*0.03*
432-24162-1	HOSE STUD STRAIGHT D6/NW4 VS SHORT	6	25	–	–	Zinc-nickel, Cr-6-free	10	*0.02*
532-30739-1	HOSE STUD 90DEGREE D6/NW4 VS SHORT	6	29,5	–	36	Zinc-nickel, Cr-6-free	12	*0.02*
Standard hose studs								
853-370-002	HOSE STUD STRAIGHT D6/NW4 BEL	6	26	–	–	Zinc-nickel, Cr-6-free	10	*0.02*
853-380-002	HOSE STUD STRAIGHT D6/NW4 BEL	6	30	–	–	Zinc-nickel, Cr-6-free	12	*0.02*
853-390-002	HOSE STUD STRAIGHT D6/NW4 BEL	6	75	–	–	Zinc-nickel, Cr-6-free	20	*0.04*
853-390-005	HOSE STUD STRAIGHT D6/NW4 BEL	6	64	–	–	Zinc-nickel, Cr-6-free	20	*0.04*
853-380-004	HOSE STUD 45DEGREE D6/NW4 BEL	6	29	–	11	Zinc-nickel, Cr-6-free	20	*0.04*
853-380-003	HOSE STUD 90DEGREE D6/NW4 BEL	6	19	–	21	Zinc-nickel, Cr-6-free	10	*0.02*
853-390-003	HOSE STUD 90DEGREE D6/NW4 BEL	6	30	–	50	Zinc-nickel, Cr-6-free	20	*0.04*
853-390-004	HOSE STUD 90DEGREE D6/NW4 BEL	6	24	–	36	Zinc-nickel, Cr-6-free	16	*0.03*
406-708-005	HOSE STUD STRAIGHT D8/NW6 BEL	8	26	–	–	Zinc-nickel, Cr-6-free	19	*0.04*
406-708-006	HOSE STUD STRAIGHT D8/NW6 BEL	8	32	–	–	Zinc-nickel, Cr-6-free	20	*0.04*
406-708-007	HOSE STUD STRAIGHT D8/NW6 BEL	8	53	–	–	Zinc-nickel, Cr-6-free	24	*0.05*
406-708-009	HOSE STUD 45DEGREE D6/NW4 BEL	8	43	–	26	Zinc-nickel, Cr-6-free	20	*0.04*
406-708-008	HOSE STUD 90DEGREE D8/NW6 BEL	8	25	–	34	Zinc-nickel, Cr-6-free	20	*0.04*
406-710-002	HOSE STUD STRAIGHT D10/NW8 BEL	10	35	–	–	Zinc-nickel, Cr-6-free	32	*0.07*
855-380-002	HOSE STUD VA STRAIGHT D6/NW4 BEL	6	36	–	–	Stainless steel 1.4305	12	*0.02*
855-380-003	HOSE STUD VA 90DEGREE D6/NW4 BEL	6	19	–	21	Stainless steel 1.4305	13	*0.02*
406-708-005-S3	HOSE STUD STRAIGHT D8/NW6 BEL	8	22	–	–	Stainless steel 1.4571	20	*0.04*

Tubes and hoses

Plastic tube T

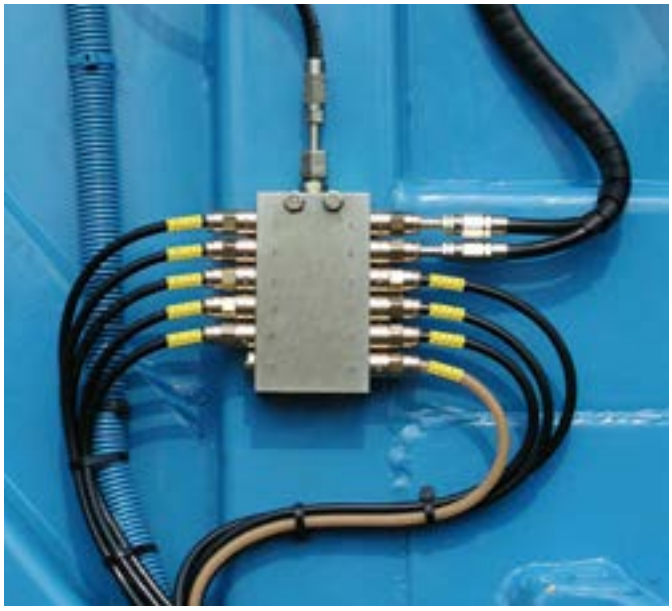

Description

Tailored SKF plastic tubes are configurable tubes in custom lengths optionally available prefilled with standard greases for quick and easy mounting. They come in nominal diameters from 2 to 10 mm and optionally also with hose protection and customer-specific markings as hose label, printing or with clips. Configuration takes place via SKF online tube configurator or via SKF parts library app.

Features and benefits

- Custom tube lengths for quick and easy installation
- Easy online configuration with automatically created order numbers and CAD data download
- Prefilled with SKF or special grease
- Customized tube end markings
- Optionally with tube protection
- Imprints for easy identification

Applications

- Metal and plastic forming machinery
- Construction machinery
- Agriculture machinery
- Renewable energy
- Machine tools
- Printing
- Marine

Technical data

Function	plastic tubes
Operating temperature	–60 to +80 °C; *-76 to 175 °F*
Nominal diameters	2, 4, 6, 8, 10 mm
Lengths	100–50 000 mm; *3.9–1 968 in*
Lubricants	oil, fluid grease and grease up to NLGI 3
Optional markings	label, printing or clips
Materials	Polyamide PA 6.12 or Polyamide PA 12 acc. to DIN 73378
Material options	L = black, stabilized against light PH = flexible, containing plasticizer, stabilized against heat and aging H = semirigid, unplasticized, stabilized against heat and aging

Online tube configurator

3D CAD data, technical drawings and data sheets of plastic tubes are now available in native format in the online parts library. In addition to enjoying easy CAD downloads, you can configure tubes with custom lengths and integrate them into your design process.

https://skf-lubrication.partcommunity.com

High-pressure hose H

Description

Tailored high-pressure hoses are configurable hoses in custom lengths and fittings for quick and easy mounting. They are available prefilled with standard greases and come with nominal diameters of 6, 8 and 10 mm. In case of demanding operating environments of the lubrication system consider using hose protections. To simplify installation of more complex systems with many lubrication lines SKF offers customer-specific markings, for example with a hose label, printing or with clips. Configuration of tailored hoses takes place via SKF online configurator or via SKF parts library app.

Features and benefits

- Individual hose lengths and customized fittings for quick and easy installation
- Easy online configuration with automatically created order numbers and CAD data download
- Prefilled with standard or individual grease
- Customized hose end markings
- Imprints for easy identification
- Optional hose protection

Applications

- Construction machinery
- Agriculture machinery
- Renewable energy
- Railways
- Marine

Technical data

Function	high-pressure hoses
Operating temperature	ND6, ND8 = -40 to +70 °C, *-40 to 158 °F* ND10 = -40 to +100 °C, *-40 to 212 °F*
Material	polyamide (soft), polyester (high strength), polyurethane, synthetic rubber
Nominal diameter	6, 8 or 10 mm
Lengths	50–50 000 mm; *1.9–1 968 in*
Lubricants	oil, fluid grease and grease up to NLGI 3
Optional markings	label, printing or clips
Operating pressure	max. 130–840 bar; *1 885–12 183 psi* depending on model / size / length

Online hose configurator

3D CAD data, technical drawings and data sheets of high-pressure hoses are now available in native format in the online parts library. In addition to enjoying easy CAD downloads, you can combine and configure hoses with the fittings of your choice and integrate them into your design process.

https://skf-lubrication.partcommunity.com

Fixing material

Description

The following chapter includes the screws and bolts for fixing the individual components of lubrication systems, as well as cable straps, mounting bases and a large selection of pipe clamps for fixing the pipes.

Clamps for pipes with a diameter of 8 mm and 10 mm are available in two versions: One according to DIN 72573 and another reinforced design version with a thicker and wider metal sheet than DIN 72573.

For use in corrosive areas, various mounting parts are also available in stainless steel (material 1.4571).

Features and benefits

- Wide product range with many different dimensions
- Recommended and reliable fixing material for lubrication system components such as pipes and tubes
- Suitable for all types of automatic lubrication systems

Applications

- Metal forming machines
- On- and off-road vehicles
- Construction and mining
- Agriculture machinery
- Packaging machines
- General industry
- Etc.

Fixing material

Fixing clips

602-001 – 612-001, 226-xxxxx-1

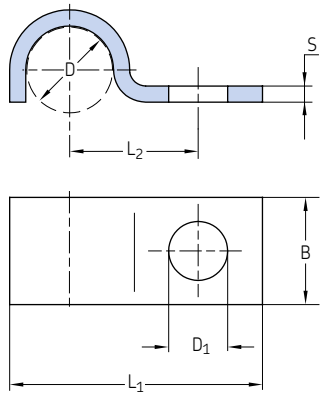

608-003

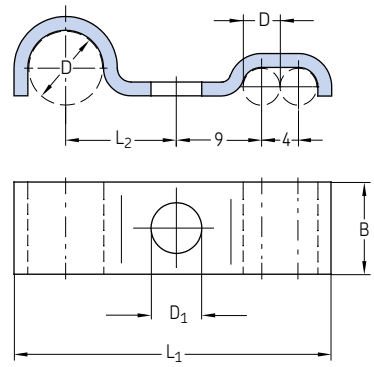

Order number	Designation	Tube∅D	B	D_1	L_1	L_2	S	Material	Weight (100 pcs)	
			mm	mm	mm	mm	mm		g	*lb*
Zinc-plated steel										
602-001	TUBE CLAMP ST-Z D 2,5(1x)	2,5 mm	10	3,5	11,25	5	1,5	Zinc-plated steel	200	*0.44*
604-001	TUBE CLAMP ST-Z D 4(1x)	4 mm	10	5,5	18,5	9	1,5	Zinc-plated steel	200	*0.44*
606-010	TUBE CLAMP ST-Z D 6(1x)	6 mm	10	5,5	20,5	10	1,5	Zinc-plated steel	300	*0.66*
608-001	TUBE CLAMP ST-Z D 8(1x)	8 mm	10	5,5	23,5	12	1,5	Zinc-plated steel	300	*0.66*
608-003	TUBE CLAMP ST-Z D 8(1x)D4(2x)	8 mm / 4 mm	10	5,5	34	12	1,5	Zinc-plated steel	300	*0.66*
610-001	TUBE CLAMP ST-Z D10(1x)	10 mm or 1/8	10	5,5	25,5	13	1,5	Zinc-plated steel	400	*0.88*
612-001	TUBE CLAMP ST-Z D12(1x)	12 mm	20	6,8	35	18	2	Zinc-plated steel	500	*1.1*
226-12335-7	TUBE CLAMP ST-Z D 6(1X)ZG	6 mm	10	4,8	20,5	10	1	Zinc-plated steel	200	*0.44*
226-12337-1	TUBE CLAMP ST-Z D 8(1X)ZG	8 mm	15	7	28	15,5	2	Zinc-plated steel	700	*1.54*
226-12338-1	TUBE CLAMP ST-Z D10(1X)ZG	10 mm	15	7	30	15	2	Zinc-plated steel	800	*1.76*
Stainless steel										
226-13716-1	TUBE CLAMP 1.4571 D 6(1X)	6 mm	10	4,8	20	10	1	Stainless steel 1.4571	200	*0.44*
226-13717-1	TUBE CLAMP 1.4571 D 8(1X)	8 mm	15	7	28	15,5	2	Stainless steel 1.4571	700	*1.54*
226-13673-1	TUBE CLAMP 1.4571 D10(1X)	10 mm	15	7	30	15	2	Stainless steel 1.4571	800	*1.76*

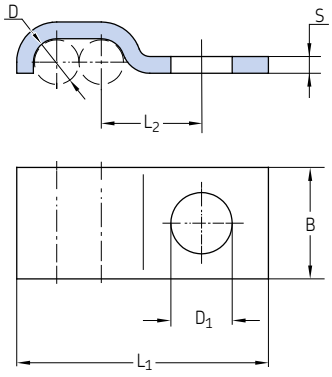

Order number	Designation	Tube ∅D	Number of tubes	B	D_1	L_1	L_2	S	Material	Weight (100 pcs)	
		mm		mm	mm	mm	mm	mm		g	*lb*
602-002	TUBE CLAMP ST-Z D 2,5(2x)	2,5	2	10	3,5	13,8	5	1,5	Zinc-plated steel	200	*0.44*
604-002	TUBE CLAMP ST-Z D 4(2x)	4	2	10	5,5	22,6	9	1,5	Zinc-plated steel	200	*0.44*
604-003	TUBE CLAMP ST-Z D 4(3x)	4	3	10	5,5	26,6	9	1,5	Zinc-plated steel	300	*0.66*

Fixing material

Fixing clips

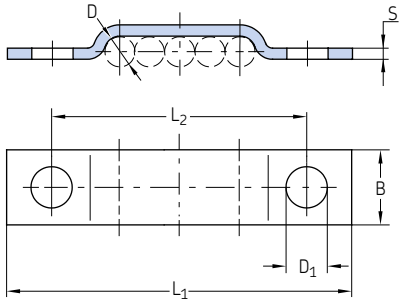

Order number	Designation	Tube ØD	Number of tubes	B	D_1	L_1	L_2	S	Material	Weight (100 pcs)	
		mm	mm	mm	mm	mm	mm	mm		g	*lb*
Zinc-plated steel											
604-014	TUBE CLAMP ST-Z D 4(4x)	4	4	10	5,5	42	30	1,5	Zinc-plated steel	400	*0.88*
604-015	TUBE CLAMP ST-Z D 4(5x)	4	5	10	5,5	46	34	1,5	Zinc-plated steel	400	*0.88*
604-016	TUBE CLAMP ST-Z D 4(6x)	4	6	10	5,5	50	38	1,5	Zinc-plated steel	500	*1.1*
604-018	TUBE CLAMP ST-Z D 4(8x)	4	8	10	5,5	58	46	1,5	Zinc-plated steel	600	*1.32*
DIN72573-2x6-ST	TUBE CLAMP ST-Z D 6(2x)	6	2	10	4,8	39	27	1	Zinc-plated steel	300	*0.66*
DIN72573-3x6-ST	TUBE CLAMP ST-Z D 6(3x)	6	3	10	4,8	45	33	1	Zinc-plated steel	400	*0.88*
DIN72573-4x6-ST	TUBE CLAMP ST-Z D 6(4x)	6	4	10	4,8	51	39	1	Zinc-plated steel	400	*0.88*
DIN72573-5x6-ST	TUBE CLAMP ST-Z D 6(5x)	6	5	10	4,8	57	45	1	Zinc-plated steel	400	*0.88*
DIN72573-6x6-ST	TUBE CLAMP ST-Z D 6(6x)	6	6	10	4,8	64	52	1	Zinc-plated steel	600	*1.32*
DIN72573-2x8-ST	TUBE CLAMP ST-Z D 8(2x)	8	2	10	4,8	43	31	1	Zinc-plated steel	400	*0.88*
DIN72573-3x8-ST	TUBE CLAMP ST-Z D 8(3x)	8	3	10	4,8	51	39	1	Zinc-plated steel	400	*0.88*
DIN72573-4x8-ST	TUBE CLAMP ST-Z D 8(4x)	8	4	10	4,8	59	47	1	Zinc-plated steel	500	*1.1*
DIN72573-5x8-ST	TUBE CLAMP ST-Z D 8(5x)	8	5	10	4,8	68	56	1	Zinc-plated steel	600	*1.32*
D72573-6x8ST+ZZ1	TUBE CLAMP ST-Z D 8(6x)	8	6	10	4,8	75	56	1	Zinc-plated steel	700	*1.54*
DIN72573-2x10-ST	TUBE CLAMP ST-Z D10(2x)	10	2	10	4,8	45	33	1	Zinc-plated steel	400	*0.88*
DIN72573-3x10-ST	TUBE CLAMP ST-Z D10(3x)	10	3	10	4,8	55	43	1	Zinc-plated steel	500	*1.1*
DIN72573-4x10-ST	TUBE CLAMP ST-Z D10(4x)	10	4	10	4,8	67	55	1	Zinc-plated steel	600	*1.32*
DIN72573-5x10-ST	TUBE CLAMP ST-Z D10(5x)	10	5	10	4,8	77	65	1	Zinc-plated steel	800	*1.76*
226-12337-2	TUBE CLAMP ST-Z D 8(2X)	8	2	15	7	61,2	39	2	Zinc-plated steel	1 300	*2.87*
226-12337-3	TUBE CLAMP ST-Z D 8(3X)	8	3	15	7	69,2	47	2	Zinc-plated steel	1 500	*3.31*
226-12337-4	TUBE CLAMP ST-Z D 8(4X)	8	4	15	7	77,2	55	2	Zinc-plated steel	1 700	*3.75*
226-12337-5	TUBE CLAMP ST-Z D 8(5X)	8	5	15	7	85,2	63	2	Zinc-plated steel	1 800	*3.97*
226-12337-6	TUBE CLAMP ST-Z D 8(6X)	8	6	15	7	93,2	71	2	Zinc-plated steel	2 000	*4.41*
226-12338-2	TUBE CLAMP ST-Z D10(2X)	10	2	15	7	65,3	40	2	Zinc-plated steel	1 300	*2.87*
226-12338-3	TUBE CLAMP ST-Z D10(3X)	10	3	15	7	75,3	50	2	Zinc-plated steel	1 600	*3.53*
226-12338-4	TUBE CLAMP ST-Z D10(4X)	10	4	15	7	85,3	60	2	Zinc-plated steel	1 800	*3.97*
226-12338-5	TUBE CLAMP ST-Z D10(5X)	10	5	15	7	95,3	70	2	Zinc-plated steel	2 000	*4.41*
226-12338-6	TUBE CLAMP ST-Z D10(6X)	10	6	15	7	105,3	80	2	Zinc-plated steel	2 200	*4.85*
Stainless steel											
226-13716-2	TUBE CLAMP 1.4571 D 6(2x)	6	2	10	4,8	38	26	1	Stainless steel 1.4571	340	*0.75*
226-13716-3	TUBE CLAMP 1.4571 D 6(3x)	6	3	10	4,8	45	33	1	Stainless steel 1.4571	410	*0.90*
226-13716-4	TUBE CLAMP 1.4571 D 6(4x)	6	4	10	4,8	51	39	1	Stainless steel 1.4571	450	*0.99*
226-13716-5	TUBE CLAMP 1.4571 D 6(5x)	6	5	10	4,8	57	45	1	Stainless steel 1.4571	470	*1.04*
226-13673-6	TUBE CLAMP 1.4571 D 6(6x)	6	6	10	4,8	64	52	1	Stainless steel 1.4571	500	*1.10*
226-13717-2	TUBE CLAMP 1.4571 D 8(2x)	8	2	15	7	61,2	39	2	Stainless steel 1.4571	1 200	*2.65*
226-13717-3	TUBE CLAMP 1.4571 D 8(3X)	8	3	15	7	69,2	47	2	Stainless steel 1.4571	1 400	*3.09*
226-13717-4	TUBE CLAMP 1.4571 D 8(4X)	8	4	15	7	77,2	55	2	Stainless steel 1.4571	1 600	*3.53*
226-13718-1	TUBE CLAMP 1.4571 D10(2X)	10	2	15	7	65,3	40	2	Stainless steel 1.4571	1 300	*2.87*
226-13673-4	TUBE CLAMP 1.4571 D10(3X)	10	3	15	7	75,3	50	2	Stainless steel 1.4571	1 600	*3.53*
226-13673-5	TUBE CLAMP 1.4571 D10(4X)	10	4	15	7	85,3	60	2	Stainless steel 1.4571	1 700	*3.75*
226-13718-2	TUBE CLAMP 1.4571 D10(5X)	10	5	15	7	95	70	2	Stainless steel 1.4571	2 100	*4.63*
226-13718-3	TUBE CLAMP 1.4571 D10(6X)	10	6	15	7	105	80	2	Stainless steel 1.4571	2 300	*5.07*

Fixing material

Fixing clips

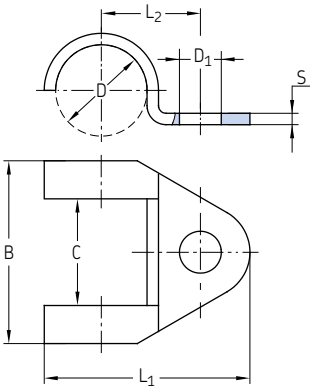

Order number	Designation	Tube ØD		B	C	D_1	L_1	L_2	S	Material	Weight (100 pcs)	
		mm	in	mm	mm	mm	mm	mm	mm		g	*lb*
604-004	TUBE CLAMP ST-Z D12(1x)	12	–	24	14	5,5	27	13	1,5	Zinc-plated steel	500	*1.1*
606-014	TUBE CLAMP ST-Z D14(1x)	14	1/4	30	15	6,3	34	16	2	Zinc-plated steel	1 200	*2.65*
608-004	TUBE CLAMP ST-Z D18(1x)	18	3/8	36	20	7	40	21	1,5	Zinc-plated steel	1 200	*2.65*
610-004	TUBE CLAMP ST-Z D20(1x)	20	1/2	36	20	7	40	21	1,5	Zinc-plated steel	1 200	*2.65*

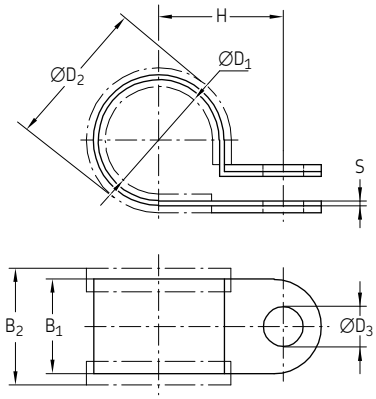

Order number	Designation	$ØD_1$	$ØD_2$	$ØD_3$	B_1	B_2	H	S	Material	Weight (100 pcs)	
		mm	mm	mm	mm	mm	mm	mm		g	*lb*
941-206-104	TUBE CLAMP ST-RUB. D 6 F.FAST.SCREW M5	6	11,8	5,2	12	15	11	0,5	Steel, galvanized	400	*0.88*
941-206-108	TUBE CLAMP ST-RUB. D 6 F.FAST.SCREW M6	6	11,8	6,4	15	18,5	4,2	0,6	Steel, galvanized	700	*1.54*
941-208-104	TUBE CLAMP ST-RUB. D 8 F.FAST.SCREW M6	8	15,4	6,4	15	18,5	15,2	0,6	Steel, galvanized	800	*1.76*
941-209-104	TUBE CLAMP ST-RUB. D 9 F.FAST.SCREW M5	9	5	5,2	12	5	12,5	0,5	Steel, galvanized	500	*1.1*
941-209-105	TUBE CLAMP ST-RUB. D 9 F.FAST.SCREW M6	9	15	6,4	15	18,5	15,7	0,6	Steel, galvanized	900	*1.98*
941-210-104	TUBE CLAMP ST-RUB. D10 F.FAST.SCREW M6	10	17,4	6,4	15	18,5	16,2	0,6	Steel, galvanized	900	*1.98*
941-212-104	TUBE CLAMP ST-RUB. D12 F.FAST.SCREW M6	12	19,4	6,4	15	18,5	17,2	0,6	Steel, galvanized	1 000	*2.21*
941-213-104	TUBE CLAMP ST-RUB. D13 F.FAST.SCREW M6	13	20,4	6,4	15	18,5	7,7	0,6	Steel, galvanized	1 100	*2.43*
941-215-104	TUBE CLAMP ST-RUB. D15 F.FAST.SCREW M6	15	22,4	6,4	5	18,5	18,7	0,8	Steel, galvanized	2 000	*4.41*
941-217-104	TUBE CLAMP ST-RUB. D17 F.FAST.SCREW M5	17	23	5,2	12	15	16,5	0,5	Steel, galvanized	800	*1.76*
941-217-105	TUBE CLAMP ST-RUB. D17 F.FAST.SCREW M6	17	23	6,4	15	8,5	19,7	0,8	Steel, galvanized	1 500	*3.31*
941-218-101	TUBE CLAMP ST-RUB. D18 F.FAST.SCREW M6	18	24	6,4	15	8,5	20,2	0,6	Steel, galvanized	1 400	*3.09*
941-220-104	TUBE CLAMP ST-RUB. D20 F.FAST.SCREW M6	20	27,6	6,4	15	8,5	21,2	0,8	Steel, galvanized	1 500	*3.31*
941-222-100	TUBE CLAMP ST-RUB. D22 F.FAST.SCREW M6	22	28	6,4	15	18,5	22,2	0,8	Steel, galvanized	1 700	*3.75*
941-225-104	TUBE CLAMP ST-RUB. D25 F.FAST.SCREW M6	25	31	6,4	15	18,5	23,7	0,8	Steel, galvanized	2 000	*4.41*

Fixing material

Pipe brackets acc. to DIN 3015

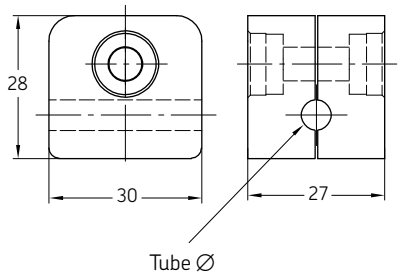

Order number	Designation	Tube ∅	Material	Weight	
		mm		g	*lb*
941-606-000	TUBE CLAMP 106 PP	*6*	Polypropylene	10	*0.02*
941-608-000	TUBE CLAMP 108 PP	*8*	Polypropylene	10	*0.02*
941-610-000	TUBE CLAMP 110 PP	*10*	Polypropylene	5	*0.01*
Tube clamp PP with weld plate, standard series					
226-12343-5	TUBE CLAMP SP 110 PP -LI	10	Polypropylene	40	*0.09*
226-12343-1	TUBE CLAMP SP 320 PP -LI	20	Polypropylene	77	*0.17*
226-13097-3	TUBE CLAMP SP 320 /20 PP -GD -AS	2x20	Polypropylene	173	*0.38*
226-12343-2	TUBE CLAMP SP 430 PP -LI	30	Polypropylene	80	*0.18*
Tube clamp PP with weld plate and cover plate, heavy series					
226-13058-3	TUBE CLAMP SPAL4020 PP -DPAL-AS	20	Polypropylene	394	*0.87*
226-13058-5	TUBE CLAMP SPAL5030 PP -DPAL-AS	30	Polypropylene	480	*1.06*

Cable straps

898-610-000, 898-710-000, 898-710-001

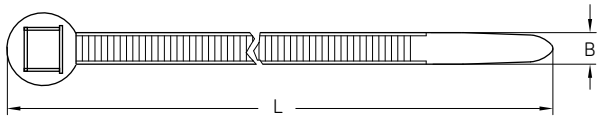

898-510-000

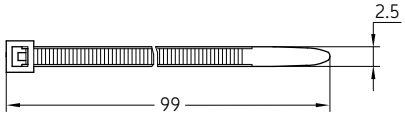

Order number	Designation	L	B	Material	Weight (100 pcs)	
		mm	mm		g	*lb*
898-610-000	CABLE STRAP SW 204LGx4,7	197	4,9	Polyamide	100	*0.22*
898-710-000	CABLE STRAP SW 302LGx4,8	302	4,9	Polyamide	200	*0.44*
898-710-001	CABLE STRAP SW 360LGx7,5	360	7,5	Polyamide	500	*1.10*
For automatic pincers						
898-510-000	CABLE STRAP SW 100LGx2,5	99	2,5	Polyamide	100	*0.22*

Mounting base

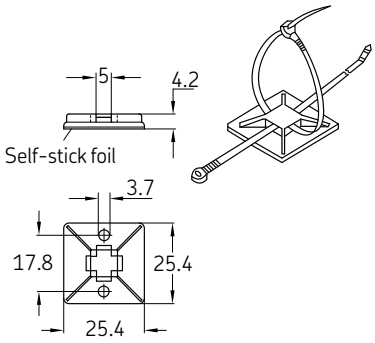

Order number	Designation	Material	Weight (100 pcs)	
			g	*lb*
179-990-186	MOUNTING PLATE 25,4x25,4	ABS	100	*0.22*

Fixing bolts

DIN EN ISO 4762

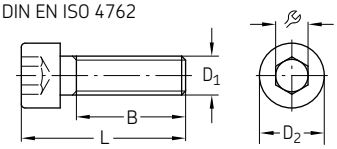

IN EN ISO 4014 / DIN EN ISO 4017

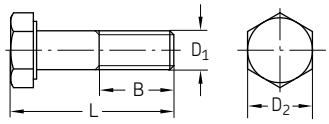

DIN7513

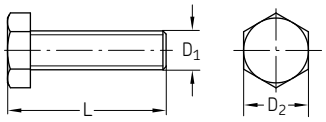

Order number	Designation	D_1	L	D_2	B		Material	Weight	
		mm	mm	mm	mm	mm		g	*lb*
Steel, galvanized									
201-12015-5	SCREW,SOCK,HEX. 8.8 M4x 20CF	M4	20	7	14	3	Steel, galvanized	3	*0.007*
201-12019-9	SCREW,SOCK,HEX. 8.8 M6x 16CF	M6	16	10	18	5	Steel, galvanized	6	*0.013*
201-12018-7	SCREW,SOCK,HEX. 8.8 M6x 25CF	M6	25	10	18	5	Steel, galvanized	7	*0.015*
201-12019-6	SCREW,SOCK,HEX. 8.8 M6x 60CF	M6	60	10	18	5	Steel, galvanized	14	*0.031*
201-12021-3	SCREW,SOCK,HEX. 8.8 M8x 16CF	M8	16	13	12	6	Steel, galvanized	20	*0.044*
DIN931-M6x30-8.8	SCREW,HEX. 8.8 M 6x 30 CF	M6	30	10	18	10	Steel, galvanized	8	*0.018*
DIN933-M4x10-8.8	SCREW,HEX. 8.8 M 4x 10 CF	M4	10	7	5	–	Steel, galvanized	2	*0.004*
200-13092-1	SCREW,HEX. 8.8 M 5x 12CF	M5	12	8	6	–	Steel, galvanized	3	*0.007*
200-13017-9	SCREW,HEX. 8.8 M 5x 16CF	M5	16	8	11		Steel, galvanized	3	*0.007*
200-13017-5	SCREW,HEX. 8.8 M 5x 45CF	M5	45	8	40		Steel, galvanized	7	*0.015*
200-13022-4	SCREW,HEX. 8.8 M 6x 16CF	M6	16	10	9	–	Steel, galvanized	5	*0.011*
200-13022-7	SCREW,HEX. 8.8 M 6x 20CF	M6	20	10	13	–	Steel, galvanized	6	*0.013*
200-13022-1	SCREW,HEX. 8.8 M 6x 25CF	M6	25	10	19	–	Steel, galvanized	7	*0.015*
200-13037-3	SCREW,HEX. 8.8 M 6x 60CF	M6	60	10	53		Steel, galvanized	14	*0.031*
200-12553-4	SCREW,HEX. 8.8 M 8x 20CF	M8	20	13	11	–	Steel, galvanized	12	*0.026*
200-10406-7	SCREW,HEX. 8.8 M 8x 25CF	M8	25	13	16	–	Steel, galvanized	13	*0.029*
200-12007-6	SCREW,HEX. 8.8 M 8x 30CF	M8	30	13	21		Steel, galvanized	15	*0.033*
200-12553-8	SCREW,HEX. 8.8 M 8x 40CF	M8	40	13	31		Steel, galvanized	18	*0.04*
200-12399-2	SCREW,HEX. 8.8 M 8x 80CF	M8	80	13	71		Steel, galvanized	34	*0.075*
200-12523-3	SCREW,HEX. 8.8 M10x 40CF	M10	40	16	39	–	Steel, galvanized	30	*0.066*
200-12009-7	SCREW,HEX. 8.8 M12x 40CF	M12	40	18	28		Steel, galvanized	34	*0.075*
DIN7513-BM4x20	SCREW,SELF-TAPP C15 BM 4,0x 20 CF	M4	20	7		–	Steel, galvanized	2	*0.004*
DIN7513-BM4x25	SCREW,SELF-TAPP C15 BM 4,0x 25 CF	M4	25	7		–	Steel, galvanized	2	*0.004*
206-12124-3	SCREW,SELF-TAPP C15 BM 5,0x 10	M5	10	8,5		–	Steel	2	*0.004*
DIN7513-BM6x25	SCREW,SELF-TAPP C15 BM 6,0x 25 CF	M6	25	10		–	Steel, galvanized	6	*0.013*
Stainless steel									
DIN912-M3x8-A4	SCREW,SOCK,HEX. A4 M 3x 8	M3	8	5,5		–	Stainless steel 1.4404	1	*0.002*
201-13741-1	SCREW,SOCK,HEX. A4 M 4x12	M4	12	7		–	Stainless steel 1.4571	2	*0.004*
201-13608-6	SCREW,SOCK,HEX. A2 M 5x10	M5	10	7		–	Stainless steel 1.4571	2	*0.004*

Couplings

Description

Couplings for hydraulic or lubrication systems are required whenever a virtually leakage-free flow of media is to be separated or distributed. Typically, this happens e.g. when a pump is used to fill several lubricant reservoirs and must be connected and disconnected again and again.

For each coupling design/model, a corresponding hose is required. Conveniently, the coupling side is on the hose of the filling pump and the counterpart, the coupling nipple, is attached to the reservoir. Another coupling application in the field of lubrication systems is the coupling and uncoupling of groups of machines that need not be continuously supplied by one lubrication pump, e.g. for vehicle lubrication and trailer lubrication.

When selecting a coupling, the maximum possible pump/system pressure must be considered. In addition, there are couplings suitable mainly for either indoor or outdoor applications.If the application is not accurately defined before ordering, stainless steel or surface-treated couplings are the best choice. Couplings protect hydraulic fluids or lubricants for contamination and allow quick and high-pressure media flows.

Features and benefits

- Wide product range with different pressure rates and sizes
- Available for filling as well as for operation of automatic lubrication systems
- Quick couplings (ESK) for under-pressure coupling available
- Virtually leakage-free filling

Applications

- All kinds of lubrication systems
- Printing and packaging machines
- Construction and mining
- Metal forming machines
- Vehicles, trucks, loaders
- Agriculture machinery
- General industry
- Machine tools
- Etc.

Low-pressure quick-disconnect couplings

Coupling, complete

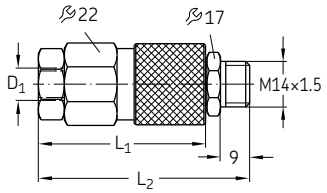

Outer coupling member

Inner coupling member

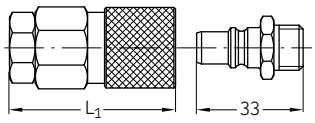

Order number	Designation	Tube ∅	D_1 [1]	L_1	L_2	Material	Operating pressure max.		Weight	
		mm	mm	mm	mm		bar	*psi*	g	*lb*
207-168-2	COUPLING, COMPLETE	6	M10×1	–	65	Steel, galvanized	45	*653*	150	*0.33*
207-188-2	COUPLING, COMPLETE	8	M14×1,5	–	71,5	Steel, galvanized	45	*653*	152	*0.34*
207-168.U7	OUTER COUPLING MEMBER	6	–	51,5	–	Steel, galvanized	45	*653*	120	*0.26*
207-188.U11	OUTER COUPLING MEMBER	8	–	58	–	Steel, galvanized	45	*653*	130	*0.29*
207-168.U2	INNER COUPLING MEMBER	–	–	–	–	Steel, galvanized	45	*653*	22	*0.05*

Both coupling members are shut off when disconnected!

[1] Ports tapped for solderless tube connection

Medium- and high-pressure quick-disconnect couplings

995-001-525, 995-001-526

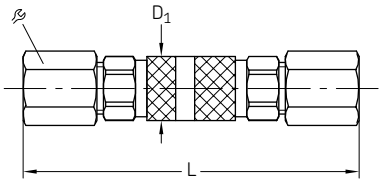

626-26246-1

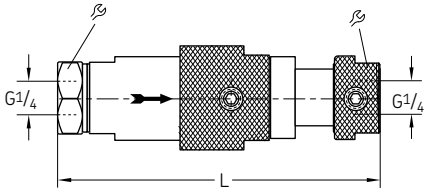

Order number	Designation	Tube ∅	D_1	L		Material	Operating pressure max.		Weight	
		mm	mm	mm	mm		bar	*psi*	g	*lb*
995-001-525	PLUG AND SOCKET COUPLING, TUBE 4	4	10	68	10	Steel, galvanized	100	*1 450*	30	*0.07*
995-001-526	PLUG AND SOCKET COUPLING, TUBE 6	6	15	80	12	Steel, galvanized	100	*1 450*	35	*0.08*
626-26246-1	COUPLING ESK G1/4 D	–	–	124	27	Steel, galvanized	300	*4 351*	760	*1.68*

High-pressure couplings

995-001-096

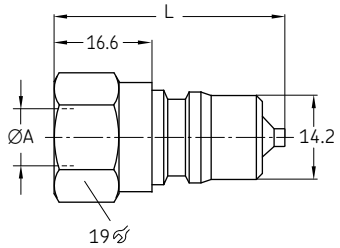

995-001-500

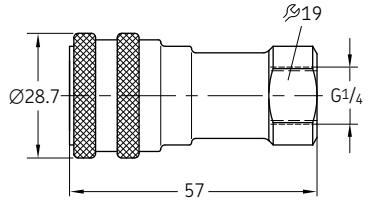

995-001-501 / 995-001-502

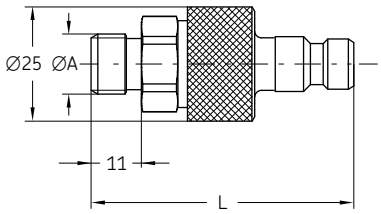

995-001-950

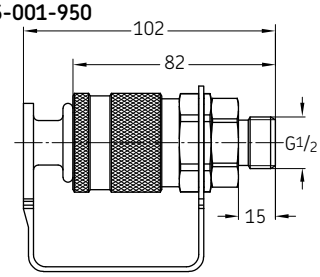

995-000-705

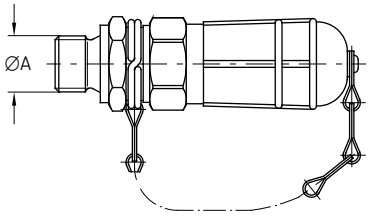

995-001-500

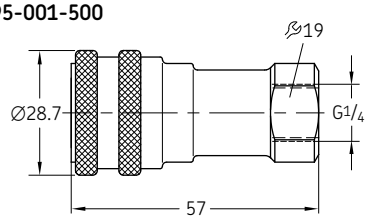

Order number	Designation	Material	ØA	L	Respective dust cover Order number	Respective coupling socket Order number	Operating pressure max.		Weight	
			mm	mm			bar	*psi*	g	*lb*
995-001-096	COUPLING PLUG G1/4 350BAR	Steel, galvanized	G 1/4	39	**995-001-235**	**995-001-500**	350	*5 080*	60 [1]	*0.13* [1]
995-001-501	COUPLING PLUG G1/4 200BAR	Steel, galvanized	G 1/4	57.5	**995-001-503**	**995-002-073**	200	*2 900*	305 [2]	*0.67* [2]
995-001-502	COUPLING PLUG G1/2 250BAR	Steel, galvanized	G 1/2	82	**995-001-504**	**995-001-950**	250	*3 600*	1 050 [2]	*2.32* [2]
995-000-705	COUPLING PLUG G1/4 70BAR	Steel, galvanized	G 1/4	–	–	**995-001-500**	70	*1 000*	233 [3]	*0.51* [3]

[1] weight for plug + dust cover
[2] weight for complete coupling
[3] weight for plug + coupling socket

Couplings with return flow port

995-001-620

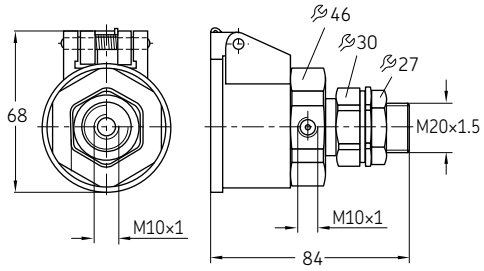

995-001-621

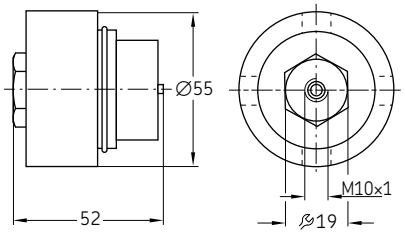

995-001-622

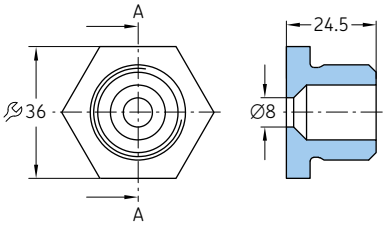

995-001-623

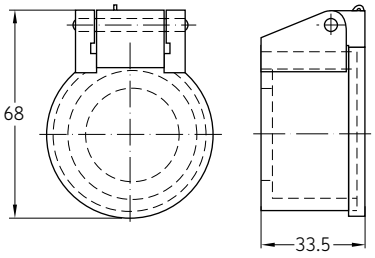

Order number	Designation	Material	Operating pressure max.		Weight	
			bar	*psi*	g	*lb*
995-001-620	COUPLING SOCKET	Steel, galvanized	100	*1 450*	480	*1.06*
995-001-621	COUPLING PLUG	Steel, galvanized	100	*1 450*	380	*0.84*
995-001-622	STUB	Steel, galvanized	100	*1 450*	100	*0.22*
995-001-623	DUST COVER	Steel, galvanized	100	*1 450*	55	*0.12*

Valves

Description

Several kind of valves are usually needed to operate automatic lubrication systems accurately. Intermittent or subsectioned systems only work if the right valves are installed. Valves specifically used in just one SKF system, such as in single-line lubrication systems, can be selected out of the respective SKF automatic lubrication system catalogues.

This catalogue chapter contains valves for use in multiple systems:

- Shut-off valves
- Safety valves
- Check valves
- Relief valves

In several applications, necessary valves may also come directly integrated in the pump unit, mounted in a valve block or as part of a reservoir unit.

Features and benefits

- System component protection against excessive pressure and destruction
- Cost-efficient operation due to lubrication system subsectioning
- Shut-off valves allow manual activation or deactivation of independently operating machine zones

Applications

- Small-to-medium machine tools
- Mobile on-road (fleet vehicles, on-road vehicles)
- Assembly/Automation, food packaging, part assembly lines
- Pulp and paper industry
- Injection molding
- General industry
- Heavy industry
- Etc.

Relief valve

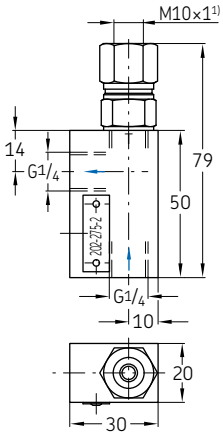

Connection diagram

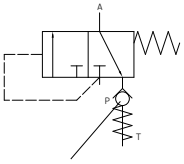

Check valve = residual pressure valve 0.5 bar

Order number	Designation	Residual pressure		Weight	
		bar	*psi*	g	*lb*
202-275-2	PRESS. RELIEF VALVE 0,5BAR G1/4	0,5	*7.25*	240	*0.53*

Relief valves with bleed valve and safety valve

Fitted to reservoir

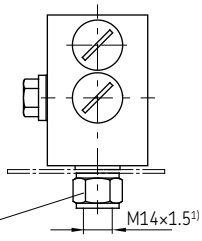

For P and R
2 adapters each 408-160
washers 508-108

[1)] Ports tapped for solderless tube connection

Relief valve circuit diagram

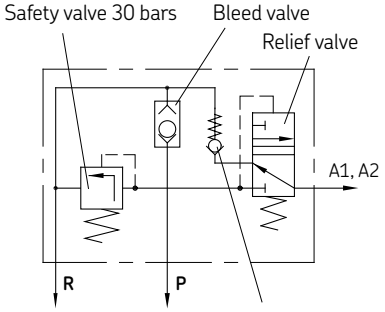

Check valve = residual pressure valve 0.5 bars

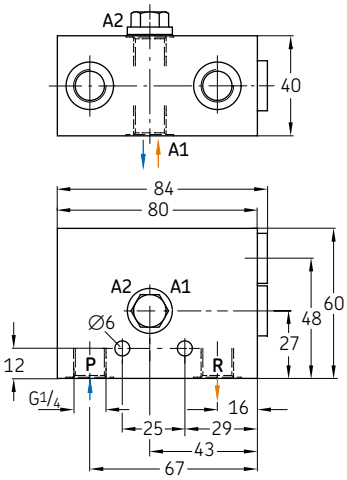

Order number	Designation	Tube Ø	Material	Residual pressure		Weight	
		mm		bar	*psi*	g	*lb*
202-175-30	PRESS. RELIEF VALVE 30BAR R1/4	–	Aluminum	30	*435*	570	*1.26*
Adapters [1)]							
406-054	CONNECTING PIECE ST 6 G1/4A ZN	6	Steel, galvanized	–	–	20	*0.04*
301-020	CONNECTING PIECE ST 8 G1/4A ZN	8	Steel, galvanized	–	–	16	*0.04*
410-163	CONNECTING PIECE ST 10 - G1/4A ZN	10	Steel, galvanized	–	–	30	*0.07*

[1)] Ports tapped for solderless tube connection

A = Outlet; **P** = Inlet; **T** (**R**) = Return

Pressure regulating valves, adjustable (poppet valve)

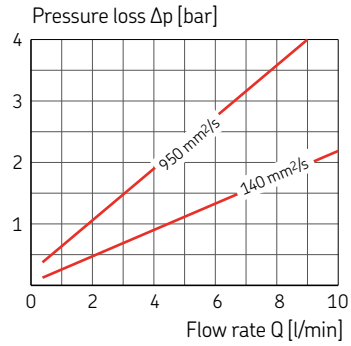

With increasing flow rate, the pressure upstream from the valve will also rise in accordance with the curves.

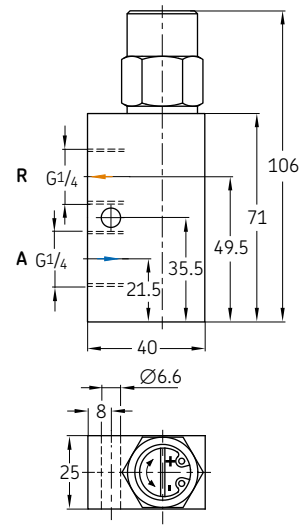

Order number	Designation	Adjustable pres. range		Operating pres. max.		Oil temperature		Viscosity range	Seal	Weight	
		bar	*psi*	bar	*psi*	°C	°F	mm²/s		g	*lb*
Steel, galvanized											
WVN200-10E6	PRES.REGUL.VALVE 1-6BAR NBR	1 to 6	*14,5 to 87*	40	*580*	80	*176*	20 to 1000	NBR	500	*1.10*
WVN200-10E12	PRES.REGUL.VALVE 3-12BAR NBR	3 to 12	*43,5 to 174*	40	*580*	80	*176*	20 to 1000	NBR	500	*1.10*
WVN200-10E12-S8	PRES.REGUL.VALVE 3-12BAR FPM	3 to 12	*43,5 to 174*	40	*580*	80	*176*	20 to 1000	FPM	500	*1.10*
WVN200-10E25	PRES.REGUL.VALVE 4-25BAR NBR	4 to 25	*58 to 363*	40	*580*	80	*176*	20 to 1000	NBR	500	*1.10*
WVN200-10E25-S8	PRES.REGUL.VALVE 4-25BAR FPM	4 to 25	*58 to 363*	40	*580*	80	*176*	20 to 1000	FPM	500	*1.10*
WVN200-10E35	PRES.REGUL.VALVE 4-35BAR NBR	4 to 35	*58 to 510*	40	*580*	80	*176*	20 to 1000	NBR	510	*1.12*
WVN200-10E60	PRES.REGUL.VALVE 12-60BAR NBR	12 to 60	*174 to 870*	70	*1 015*	80	*176*	20 to 1000	NBR	510	*1.12*
WVN200-10E60-S8	PRES.REGUL.VALVE 12-60BAR FPM	12 to 60	*174 to 870*	70	*1 015*	80	*176*	20 to 1000	FPM	510	*1.12*

General characteristics
Design: poppet valve with hydraulic cushioning directly controlled
Lubricant: oil
Connecting thread: G 1/4
Mounting position: optional

Adapters for valves

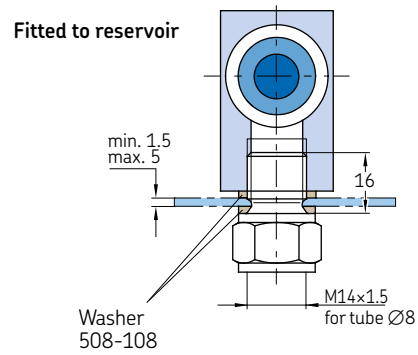

Order number	Designation	Description	Tube ØD	Material	Weight	
			mm		g	*lb*
301-020	CONNECTING PIECE ST 8 - G1/4A ZN	for valves WVN200-10E6 ...10E35	8	Steel, galvanized	16	*0.04*
410-163	CONNECTING PIECE ST 10 - G1/4A ZN	for valves WVN200-10E6 ...10E35	10	Steel, galvanized	30	*0.07*
412-163	CONNECTING PIECE ST 12 - G1/4A ZN	for valves WVN200-10E6 ...10E35	12	Steel, galvanized	51	*0.11*
508-108	SEALING RING CU 13,3x 17,9x 1,5	for valves WVN200-10E6 ...10E35	–	Copper	1	*0.00*
223-12477-6	TB.FITT.ST GE 8-L G 1/4A CF	for valve WVN200-10E60	8	Steel, galvanized	35	*0.08*
223-12272-9	TB.FITT.ST GE10-L G 1/4A CF	for valve WVN200-10E60	10	Steel, galvanized	41	*0.09*
508-108	SEALING RING CU 13,3x 17,9x 1,5	for valve WVN200-10E60	–	Copper	1	*0.00*
408-160	CONNECTING PIECE ST 8 - G1/4A ZN	adapters with long tube ends	–	Steel, galvanized	22	*0.05*

Pressure regulating valves, fixed pressure

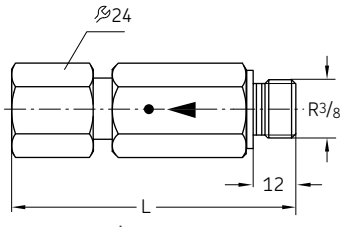

Order number	Designation	L	Material	Operating pressure max.		Weight	
		mm		bar	*psi*	g	*lb*
624-25465-1	VALVE SV -120-G3/8A Z	88	Steel, galvanized	120	*1 740*	241	*0.53*
624-25294-1	VALVE SV -350-G3/8A Z	84	Steel, galvanized	350	*5 075*	241	*0.53*
624-27092-1	VALVE SV -410-G3/8A Z	82	Steel, galvanized	410	*5 950*	241	*0.53*

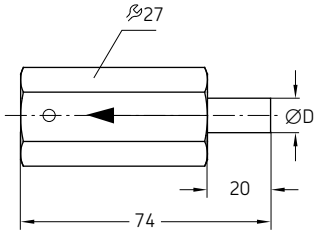

Order number	Designation	Pipe stud ØD	Material	Operating pressure max.		Weight	
		mm		bar	*psi*	g	*lb*
624-25478-1	VALVE SVP -200-S 6	6	Steel, galvanized	200	*2 900*	237	*0.52*
624-25479-1	VALVE SVP -350-S 6	6	Steel, galvanized	350	*5 075*	236	*0.52*
624-25480-1	VALVE SVP -200-S 8	8	Steel, galvanized	200	*2 900*	240	*0.53*
624-25481-1	VALVE SVP -350-S 8	8	Steel, galvanized	350	*5 075*	240	*0.53*
624-25482-1	VALVE SVP -200-S 10	10	Steel, galvanized	200	*2 900*	240	*0.53*
624-25483-1	VALVE SVP -350-S 10	10	Steel, galvanized	350	*5 075*	260	*0.57*

Pressure regulating valves

For flow rates from 0.5–2 l/min

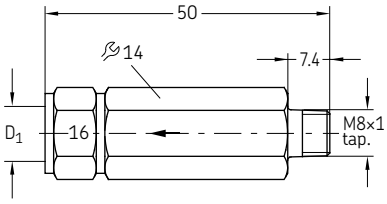

Order number	Designation	Tube ∅	D_1 1)	Opening pressure		Marking	Material	Weight	
		mm	mm	bar	*psi*			g	*lb*
WVN200-4A0.4	PRES.REGUL.VALVE 0,4BAR D4	4	M8×1	0,4	*5,8*	0,4	Steel, galvanized	45	*0.10*
WVN200-4A5	PRES.REGUL.VALVE 5BAR D4	4	M8×1	5	*72,5*	5	Steel, galvanized	47	*0.10*
WVN200-4A8	PRES.REGUL.VALVE 8BAR D4	4	M8×1	8	*116*	8	Steel, galvanized	46	*0.10*
WVN200-4A12	PRES.REGUL.VALVE 12BAR D4	4	M8×1	12	*174*	12	Steel, galvanized	45	*0.10*
WVN200-4A16	PRES.REGUL.VALVE 16BAR D4	4	M8×1	16	*232*	16	Steel, galvanized	46	*0.10*
WVN200-4A25	PRES.REGUL.VALVE 25BAR D4	4	M8×1	25	*360*	25	Steel, galvanized	46	*0.10*
WVN200-4A0.4-S1	PRES.REGUL.VALVE 0,4BAR D6	6	M10×1	0,4	*5,8*	0,4	Steel, galvanized	48	*0.11*

1) Ports tapped for solderless tube connection

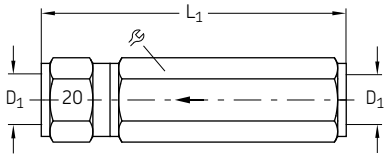

Order number	Designation	Tube ∅	D_1 1)	L_1		Opening pressure		Marking	Weight	
		mm	mm	mm	mm	bar	*psi*		g	*lb*
Steel, galvanized										
WVN200-6B0.5	PRES.REGUL.VALVE 0,5BAR D6	6	M10×1	61	14	0,5	*7,25*	5	57	*0.13*
WVN200-6B3	PRES.REGUL.VALVE 3BAR D6	6	M10×1	61	14	3	*43,5*	3	58	*0.13*
WVN200-6B8	PRES.REGUL.VALVE 8BAR D6	6	M10×1	61	14	8	*116*	8	58	*0.13*
WVN200-6B12	PRES.REGUL.VALVE 12BAR D6	6	M10×1	61	14	12	*174*	12	59	*0.13*
WVN200-6B16	PRES.REGUL.VALVE 16BAR D6	6	M10×1	61	14	16	*232*	16	60	*0.13*
WVN200-6B20	PRES.REGUL.VALVE 20BAR D6	6	M10×1	61	14	20	*290*	20	60	*0.13*
WVN200-6B40	PRES.REGUL.VALVE 40BAR D6	6	M10×1	61	14	40	*580*	40	59	*0.13*
WVN200-8B0	PRES.REGUL.VALVE 0,04BAR D8	8	M14×1,5	71	17	0,04	*0,58*	0	86	*0.19*
WVN200-8B3	PRES.REGUL.VALVE 3BAR D8	8	M14×1,5	71	17	3	*43,5*	3	87	*0.19*
WVN200-8B5	PRES.REGUL.VALVE 5BAR D8	8	M14×1,5	71	17	5	*72,5*	5	89	*0.20*
WVN200-8B12	PRES.REGUL.VALVE 12BAR D8	8	M14×1,5	71	17	12	*174*	12	89	*0.20*
WVN200-8B16	PRES.REGUL.VALVE 16BAR D8	8	M14×1,5	71	17	16	*232*	16	84	*0.19*
WVN200-8B20	PRES.REGUL.VALVE 20BAR D8	8	M14×1,5	71	17	20	*290*	20	90	*0.20*
WVN200-8B32	PRES.REGUL.VALVE 32BAR D8	8	M14×1,5	71	17	32	*464*	32	93	*0.21*
161-212-054 2)	PRES.REGUL.VALVE 20BAR D8	8	M14×1,5	84,5	17	20	*290*	20	107	*0.24*
WVN200-10B0	PRES.REGUL.VALVE 0,04BAR D10	10	M16×1,5	80	19	0,04	*0,58*	0	100	*0.22*
WVN200-10B0.5	PRES.REGUL.VALVE 0,5BAR D10	10	M16×1,5	80	19	0,5	*7,25*	5	126	*0.28*
WVN200-10B1	PRES.REGUL.VALVE 12BAR D10	10	M16×1,5	80	19	1,2	*17,4*	12	128	*0.28*
WVN200-10B32	PRES.REGUL.VALVE 32BAR D10	10	M16×1,5	80	19	32	*464*	32	130	*0.29*

1) Ports tapped for solderless tube connection
2) This valve is designed as a plunger valve. Because of this design it can also be used for regulating tasks. whereas the ball valves should be used as safety valves.

Pressure relief/regulating valves

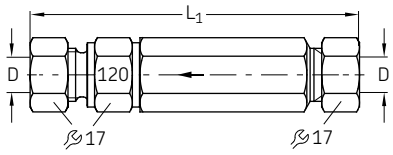

For flow rates from 0.5–2 l/min

Order number	Designation	Tube ∅	L_1	Opening pressure		Marking	Material	Weight	
		mm	mm	bar	*psi*			g	*lb*
WVN200-8D50	PRES.REGUL.VALVE 50BAR D8	8	84	50	*725*	50	Steel, galvanized	130	*0.29*
WVN200-8D75	PRES.REGUL.VALVE 75BAR D8	8	84	75	*1 090*	75	Steel, galvanized	135	*0.30*
WVN200-8D120	PRES.REGUL.VALVE 120BAR D8	8	84	120	*1 740*	120	Steel, galvanized	130	*0.29*
WVN200-8D220	PRES.REGUL.VALVE 220BAR D8	8	84	220	*3 190*	220	Steel, galvanized	130	*0.29*
WVN200-10D120-S1	PRES.RELIEF VALVE 120 BAR D8/D10	10	87	120	*1 740*	120	Steel, galvanized	140	*0.31*
WVN200-10D220-S1	PRES.RELIEF VALVE 220 BAR D8/D10	10	87	220	*3 190*	220	Steel, galvanized	135	*0.30*

Cutting sleeve screw unions according to DIN 2353

Shut-off valves

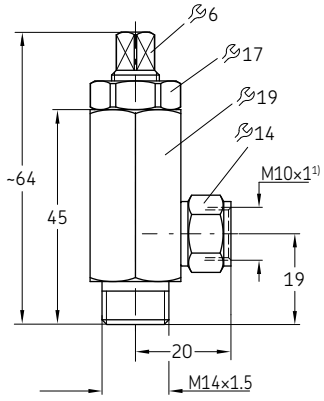

Order number	Designation	p max.		Max. temperature		Material	Weight	
		bar	*psi*	°C	°F		g	*lb*
202-085-S	SHUT-OFF VALVE 60BAR M14x1,5	60	*810*	*80*	*176*	Steel, galvanized	110	*0.24*

Direction of flow optional

Valves

Shut-off valves

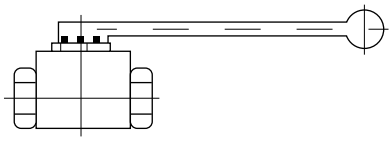

Order number	Designation	p max.		Connection	Nominal ∅ DN	Material	Weight	
		bar	*psi*		mm		g	*lb*
235-13108-4	BALL VALVE ST G 1/2 DN13 500 BAR	500	*7 250*	G 1/2 female	13	Steel, galvanized	640	*1.41*
235-13114-1	BALL VALVE ST D20 DN16 400 BAR	400	*5 800*	Tube ∅ 20	16	Steel, galvanized	960	*2.12*

Direction of flow optional

161-600-036

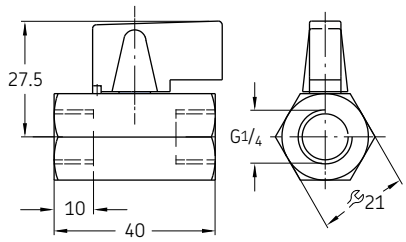

UFZ.0097

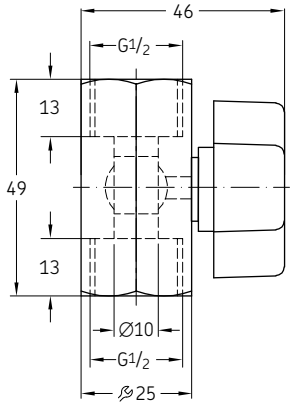

Order number	Designation	p max.		Max. temperature		Material	Weight	
		bar	*psi*	°C	°F		g	*lb*
161-600-036	BALL VALVE PN 16 G1/4 MS	16	*232*	*90*	*194*	Brass	80	*0.18*
UFZ.0097	BALL VALVE PN 10 G1/2 MS	10	*145*	*90*	*194*	Brass	150	*0.33*

Direction of flow optional

Solenoid valves

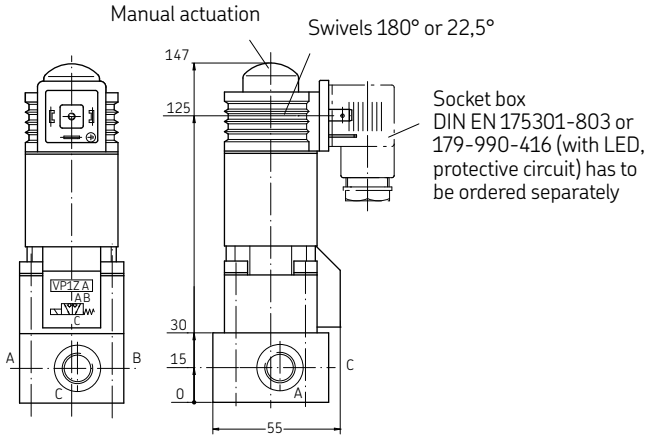

Order number	Designation	Type	Off Position	Operating voltage	Con-nection	p max.		Weight	
						bar	*psi*	kg	*lb*
525-32080-1	WAYVALVE WV-M-W2G-1/2- 24DC	2/2 way valve	normally closed	24 VDC	G 1/2	400	*5 800*	1,74	*3.84*
525-32082-1	WAYVALVE WV-M-W2G-1/2-230AC	2/2 way valve	normally closed	230 VAC	G 1/2	400	*5 800*	1,7	*3.75*
525-32081-1	WAYVALVE WV-M-W2G-1/2-110AC	2/2 way valve	normally closed	110 VAC	G 1/2	400	*5 800*	1,76	*3.88*
525-32083-1	WAYVALVE WV-M-W2O-1/2- 24DC	2/2 way valve	normally open	24 VDC	G 1/2	400	*5 800*	1,76	*3.88*
525-32084-1	WAYVALVE WV-M-W2O-1/2-230AC	2/2 way valve	normally open	230 VAC	G 1/2	400	*5 800*	1,69	*3.73*
525-32098-1	WAYVALVE WV-M-W2O-1/2-110AC	2/2 way valve	normally open	110 VAC	G 1/2	400	*5 800*	1,81	*3.99*
525-32085-1	WAYVALVE WV-M-W3 -3/8- 24DC	3/2 way valve	–	24 VDC	G 3/8	400	*5 800*	1,37	*3.02*
525-32087-1	WAYVALVE WV-M-W3 -3/8-230AC	3/2 way valve	–	230 VAC	G 3/8	400	*5 800*	1,3	*2.87*
525-32086-1	WAYVALVE WV-M-W3 -3/8-110AC	3/2 way valve	–	110 VAC	G 3/8	400	*5 800*	1,38	*3.04*
161-110-031+924	WAYVALVE WV-M-W2G-1/4- 24DC	2/2 way valve	normally closed	24 VDC	G 1/4	500	*7 250*	1,28	*2.82*
161-120-064+924	WAYVALVE WV-M-W3 -1/4- 24DC	3/2 way valve	–	24 VDC	G 1/4	500	*7 250*	1,25	*2.76*

Pressure gauges

Description

Pressure gauges are mechanically operated instruments that visually display the pressure of the connected medium. In lubrication systems, they are used to show the pressure rate of air, oil or grease of either the pump or the pipe system. They are available in various pressure ranges for low-, medium- or high-pressure applications in all kinds of lubrication systems.

The following points must be considered in order to select the correct model:

- Pressure of the medium – the maximum pressure that could occur in the system shall not be higher than 2/3 of the indication range of the pressure range
- Pulsation of the pressure – use of liquid-filled gauges is highly recommended for measuring points with high dynamic pressure loads and areas with vibration
- Corrosive atmosphere – use of stainless steel pressure gauges is highly recommended
- If an electrical signal is desired – use of pressure gauges, including digital pressure indication, is highly recommended

Features and benefits

- Visual and digital pump and system pressure monitoring
- Economical, reliable and virtually maintenance-free operation
- Wide range of pressure rates and sizes
- Liquid-filled gauges for dynamic operations available
- Stainless for operation in aggressive atmosphere available

Applications

- All kinds of lubrication systems: low, middle mechanic and plant engineering
- Oil and grease lubrication systems
- Installation at the pump or at the end of the line

Standard pressure gauges

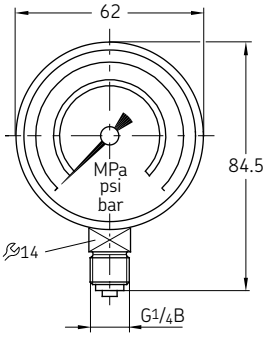

Order number	Designation	Indication range		Material	Weight	
		bar	*psi*		g	*lb*
169-101-004	PR.GAUGE D63 0-10 BAR G1/4A ABS	0–10	*0–145*	ABS housing	96	*0.21*
169-102-020 2)	PR.GAUGE D63 0-25 BAR G1/4B ABS	0–25	*0–360*	ABS housing	90	*0.20*
169-104-020 2)	PR.GAUGE D63 0-40 BAR G1/4B ABS	0–40	*0–580*	ABS housing	100	*0.22*
169-106-020 2)	PR.GAUGE D63 0-60 BAR G1/4B ABS	0–60	*0–870*	ABS housing	83	*0.18*
169-110-020 2)	PR.GAUGE D63 0-100 BAR G1/4B ABS	0–100	*0–1 450*	ABS housing	90	*0.20*
169-116-000	PR.GAUGE D63 0-160 BAR G1/4A ABS	0–160	*0–2 320*	ABS housing	94	*0.21*
169-125-020 2)	PR.GAUGE D63 0-250 BAR G1/4B ABS	0–250	*0–3 625*	ABS housing	84	*0.19*

Washer, **order No. 248-610.02**, must be ordered separately for use in solderless tube connections acc. to DIN 3862.

2) Associated connecting pieces → page 60

Pressure gauges with metrical thread

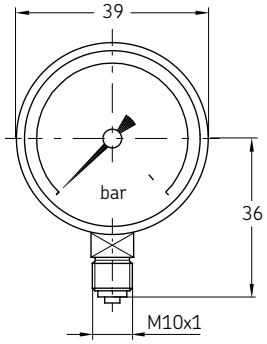

Order number	Designation	Indication range		Material	Weight	
		bar	*psi*		g	*lb*
24-1207-2204	PR.GAUGE 0-60 BAR M10x1	0–60	*0–870*	ABS housing	83	*0.18*

2) Associated connecting pieces → page 60

Pressure gauges

Damped pressure gauges with glycerin filling

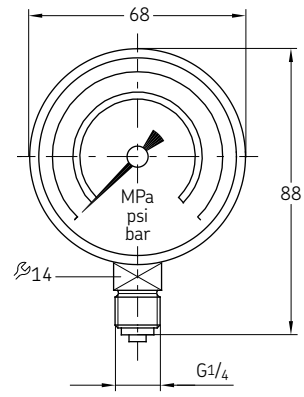

Order number	Designation	Mounting position	Indication range		Material	Weight	
			bar	*psi*		g	*lb*
169-102-015	PR.GAUGE D68 0- 25 BAR GLYCER G1/4B VA	vertically	0–25	*0–360*	Stainless steel housing	210	*0.46*
169-104-015	PR.GAUGE D68 0- 40 BAR GLYCER G1/4B VA	vertically	0–40	*0–580*	Stainless steel housing	200	*0.44*
169-106-015	PR.GAUGE D68 0- 60 BAR GLYCER G1/4B VA	vertically	0–60	*0–870*	Stainless steel housing	200	*0.44*
169-110-015	PR.GAUGE D68 0-100 BAR GLYCER G1/4B VA	vertically	0–100	*0–1 450*	Stainless steel housing	200	*0.44*
169-125-015	PR.GAUGE D68 0-250 BAR GLYCER G1/4B VA	vertically	0–250	*0–3 625*	Stainless steel housing	200	*0.44*
169-140-001	PR.GAUGE D62 0-400 BAR GLYCER G1/4B VA	vertically	0–400	*0–5 800*	Stainless steel housing	220	*0.49*

Washer, **order No. 248-610.02**, must be ordered separately for use in solderless tube connections acc. to DIN 3862.

Damped pressure gauges with glycerin filling and visualization in red/green

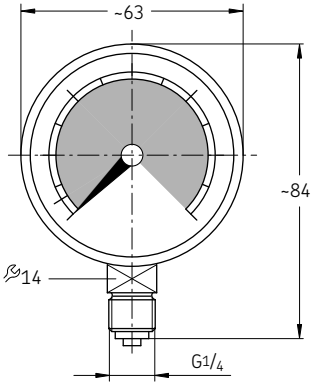

Order number	Designation	Mounting position	Indication range		Material	Weight	
			bar	*psi*		g	*lb*
169-101-607	PR.GAUGE D63 0-16 BAR GLYZ. G1/4B VA	vertically	0–16	*0–230*	Stainless steel housing	166	*0,37*
169-106-011	PR.GAUGE D63 0-60 BAR GLYZ. G1/4B VA	vertically	0–60	*0–870*	Stainless steel housing	220	*0,49*
169-110-010	PR.GAUGE D63 0-100 BAR GLYZ. G1/4B VA	vertically	0–100	*0–1 450*	Stainless steel housing	174	*0,38*

Washer, **order No. 248-610.02**, must be ordered separately for use in solderless tube connections acc. to DIN 3862.

Pressure gauges

Damped pressure gauges with restrictor

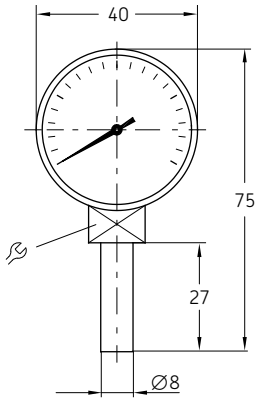

Order number	Designation		Restrictor	Lubricant	Indication range		Material	Weight	
		mm			bar	*psi*		g	*lb*
248-602.25	PR.GAUGE D40 0-10 BAR TUBE 8	4kt 12	–	–	0–10	*0–145*	Steel housing, black	66	*0.15*
169-102-506 [1]	PR.GAUGE D40 0-25 BAR TUBE 8	12	0,4	–	0–25	*0–360*	Steel housing, black	62	*0.14*
248-602.20	PR.GAUGE D40 0-40 BAR TUBE 8	12	–	Grease	0–40	*0–580*	Steel housing, black	59	*0.13*
169-104-008 [1]	PR.GAUGE D40 0-40 BAR TUBE 8	4kt 14	0,4	Oil	0–40	*0–580*	Steel housing, black	61	*0.13*
169-106-004	PR.GAUGE D40 0-60 BAR TUBE 8 ABS	4kt 14	–	–	0–60	*0–870*	ABS housing	60	*0.13*

Fixed by means of a double-tapered sleeve and socket union (solderless tube connection) in counterbore acc. to DIN 3854/DIN 3862.

[1] undamped design

High-pressure gauges

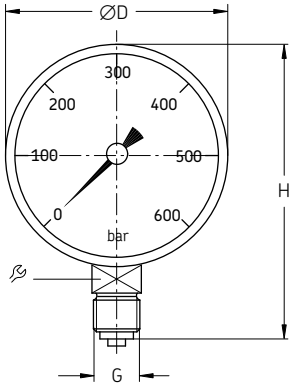

Order number	Designation	∅D	G	H	Mounting position	Indication range		Weight	
		mm	in	mm		bar	*psi*	g	*lb*
Steel housing, black									
234-13132-7	PR.GAUGE D 63 0- 400 BAR GLYZ.G1/4B BOT	63	G 1/4 bottom	84,5	vertically	0-400	*0-5800*	200	*0,44*
234-13132-8	PR.GAUGE D 63 0- 400 BAR G1/4B	63	G 1/4 bottom	84,5	vertically	0-400	*0-5800*	100	*0,22*
234-13156-6	PR.GAUGE D 63 0- 600 BAR	63	G 1/4 bottom	84,5	vertically	0-600	*0-8700*	210	*0,46*
234-13182-7	PR.GAUGE D 63 0- 600 BAR GLYZ.G1/4B BOT	63	G 1/4 bottom	84,5	vertically	0-600	*0-8700*	200	*0,44*
234-10396-2	PR.GAUGE D100 0- 400 BAR	100	G 1/2 bottom	133	vertically	0-400	*0-5800*	601	*1,33*
234-13101-2	PR.GAUGE D100 0- 600 BAR G1/2A	100	G 1/2 bottom	133	vertically	0-600	*0-8700*	560	*1,23*
234-13101-4	PR.GAUGE D100 0- 600 BAR G1/2B GLYZER	100	G 1/2 bottom	133	vertically	0-600	*0-8700*	860	*1,90*
Stainless steel housing									
234-10396-9	PR.GAUGE D 63 0- 400 BAR G1/4(BAR/PSI)VA	63	G 1/4 bottom	84,5	vertically	0-400	*0-5800*	200	*0,44*
234-13182-8	PR.GAUGE D 63 0- 400BAR G1/4B BACK VA	63	G 1/4 back	63	vertically	0-400	*0-5800*	220	*0,49*
234-10898-4	PR.GAUGE D100 0- 400 BAR+PSI GLYZ.1.4404	100	G 1/2 bottom	133	vertically	0-400	*0-5800*	993	*2,19*

Reservoirs

Description

For technical reasons, all reservoirs shown in this catalogue can only be used for oil. Grease reservoirs require additional technical features that make a combination of reservoir and pump necessary. The reservoirs shown are available in either plastic or metal designs. The advantage of the plastic containers is that the oil filling level is clearly visible through the transparent reservoir. Metal reservoirs from 6 liters (*1.5 gal*) and larger can be equipped with external oil level indicators. It is also possible to monitor the minimum or maximum oil level electrically via float switches. Depending on the oil used, the sealing material (NBR or FPM) should be selected.

Features and benefits

- Available in sizes ranging from 3 litres to 100 litres on request
- All reservoirs are equipped with a screen at the filler socket (exception: 1 litre tank screen at the outlet), which reliably prevents foreign particles from entering
- Simple and proven design for use in all kinds of automatic oil lubrication systems
- Virtually leakage-free storage of oil
- Easy manual or digital fill-level monitoring

Applications

- All automatic oil lubrication systems
- Pulp and paper industry
- Automobile presses
- Food and beverage
- Automation
- Printing
- Metals
- Etc.

Reservoirs

Plastic reservoirs

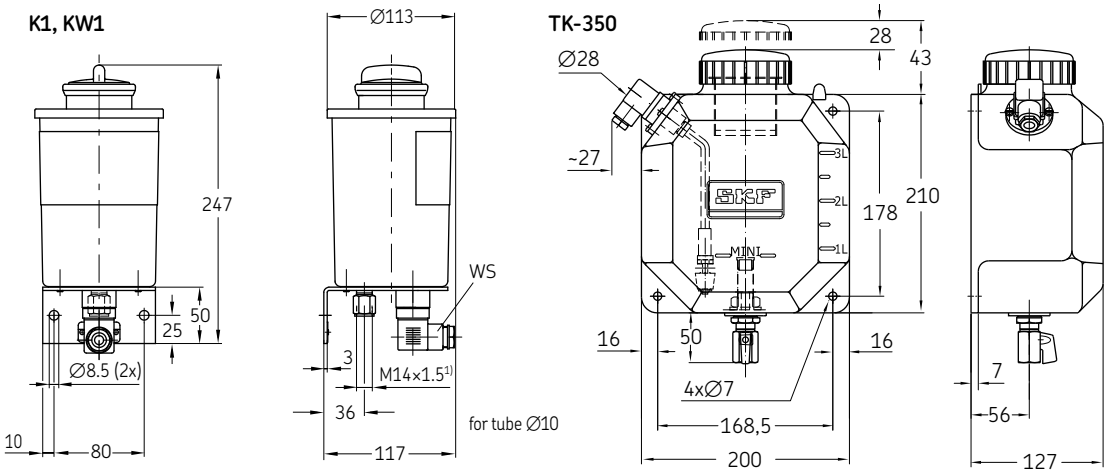

1) Ports tapped for solderless tube connection

Order number	Designation	Reservoir Capacity		Level indicator	Type of contact	Electrical connector	Seal material	Weight	
		l	*gal.*					kg	*lb*
K1	OIL RESERVOIR ASSY. PL 1YN	1	*0.26*	–	–	–	NBR	0,70	*1.54*
KW1	OIL RESERVOIR ASSY. PL 1YL (NO)	1	*0.26*	Min. filling level	NO	Rectangular connector	NBR	0,76	*1.68*
KW1-S2	OIL RESERVOIR ASSY. PL 1YL (NC)	1	*0.26*	Min. filling level	NC	Rectangular connector	NBR	0,80	*1.76*
TK-350-V	OIL RESERVOIR ASSY. PL 3,7L	3,7	*0.97*	–	–	–	NBR	0,93	*2.05*
TK-350-VM	OIL RESERVOIR ASSY. PL 3,3L (NO)	3,3	*0.87*	Min. filling level	NO	Wire with appr. 0,95 m length	NBR	1,06	*2.33*
TK-350-VMC	OIL RESERVOIR ASSY. PL 3,3L (NO)	3,3	*0.87*	Min. filling level	NO	Rectangular connector	NBR	1,13	*2.49*

Plastic reservoir, 3 liter

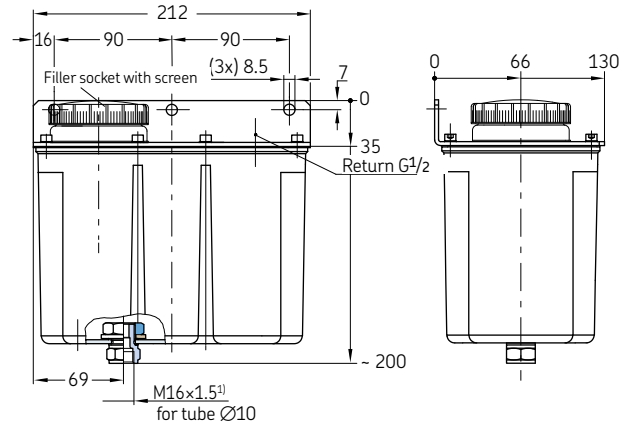

1) Ports tapped for solderless tube connection

Plastic reservoir, 6 liter

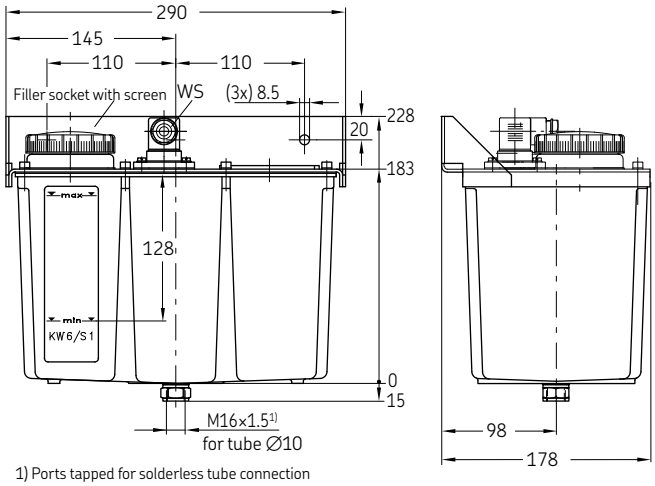

1) Ports tapped for solderless tube connection

Order number	Designation	Reservoir Capacity		Level indicator WS	Type of contact	Seal material	Weight	
		l	*gal.*				kg	*lb*
K3-S2	OIL RESERVOIR ASSY. PL 3YN	3	*0.79*	–	–	NBR	1,34	*2.95*
KW3-S1	OIL RESERVOIR ASSY. PL 3YL (SPDT)	3	*0.79*	Min. filling level	Changeover	NBR	1,63	*3.59*
K6-S5	OIL RESERVOIR ASSY. PL 6YN	6	*1.58*	–	–	NBR	2,28	*5.04*
KW6-S1	OIL RESERVOIR ASSY. PL 6YL (SPDT)	6	*1.58*	Min. filling level	Changeover	NBR	2,58	*5.70*
KW6-S2	OIL RESERVOIR ASSY. PL 6YLP (NC)	6	*1.58*	Min. filling with advance warning	2NCs	NBR	2,50	*5.51*

Reservoirs

Plastic reservoirs

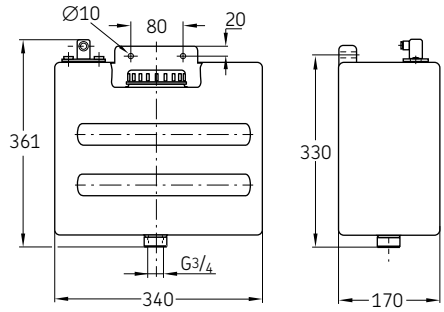

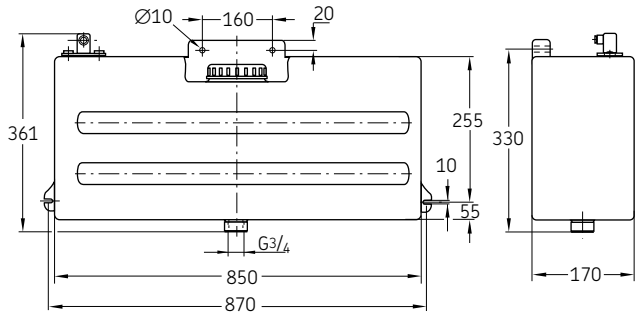

Order number	Designation	Reservoir capacity		Level indicator WS	Type of contact	Weight	
		l	*gal.*			kg	*lb*
651-28691-1	OIL RESERVOIR PL 13YL F.PMA	13	*2.86*	Minimum filling level	Changeover	2,2	*4.85*
651-29124-1	OIL RESERVOIR PL 13YN F.PMA	13	*2.86*	–	–	2	*4.40*
651-28685-1	OIL RESERVOIR PL 36YL F.PMA	36	*7.9*	Minimum filling level	Changeover	4,251	*9.37*

Oil trough with shut-off valve

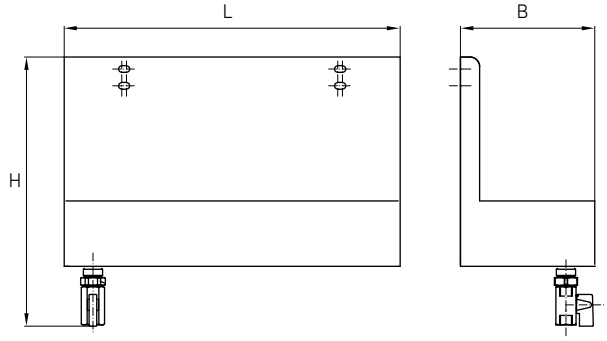

Order number	Designation	Reservoir capacity		L	B	H
		l	*gal.*			
B3.U21	OIL TROUGH 3L	3	*0,792*	350	280	140
B7.U271	OIL TROUGH 6L	6	*1,585*	400	380	190

Reservoirs

Metal reservoirs

Metal reservoir, 3 liter

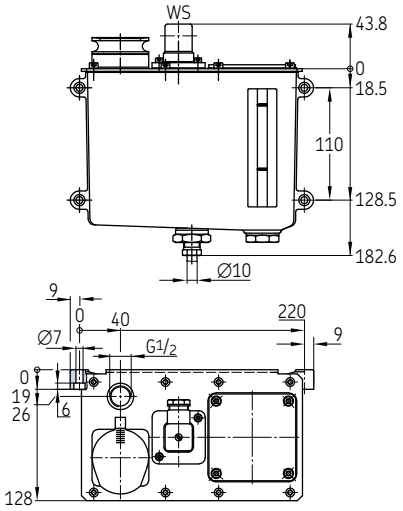

Metal reservoir, 6 liter

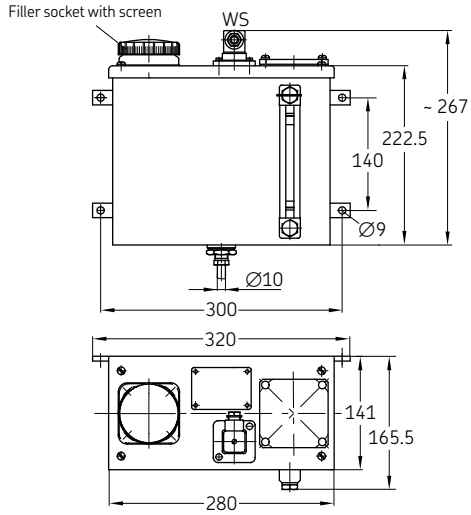

Order number	Designation	Reservoir capacity		Level indicator WS	Type of contact	Seal material	Weight	
		l	*gal.*				kg	*lb*
BW3-2-S1	OIL RESERVOIR ASSY. ST 3YL	3	*0.79*	Min. filling level	Changeover	NBR	2,24	*4.94*
B7	OIL RESERVOIR ASSY. ST 6YN	6	*1.58*	–	–	NBR	4,9	*10.80*
BW7-S6	OIL RESERVOIR ASSY. ST 6YBN	6	*1.58*	Min. and max. filling level	2 NCs	NBR	5,12	*11.29*
BW7-S7	OIL RESERVOIR ASSY. ST 6YLP (2xNC)	6	*1.58*	Min. filling level with advance warning	2 NCs	NBR	5,2	*11.47*
BW7-S8	OIL RESERVOIR ASSY. ST 6YL (SPDT)	6	*1.58*	Min. filling level	Changeover	FPM	5,11	*11.27*
BW7-S11	OIL RESERVOIR ASSY. ST 6YP (2xSPDT)	6	*1.58*	Min. filling level with advance warning	1 NO, 1 NC	NBR	4,97	*10.96*
BW7-S14	OIL RESERVOIR ASSY. ST 6YP (NC/NO))	6	*1.58*	Min. filling level with advance warning	1 NO, 1 NC	NBR	5,2	*11,47*
162-310-005	OIL RESERVOIR ASSY. ST 6YL (SPDT)	6	*1.58*	Min. filling level	Changeover	NBR	4,96	*10,94*

Oil level gauges for metal reservoirs

Order number	Designation	L_1	L_2	Reservoir Capacity		Weight	
		mm	mm	Liters	*gal.*	g	*lb*
995-003-044	OIL LEVEL GAUGE L=127MM	152	127	6	*1.58*	146	*0.32*
995-003-040	OIL LEVEL GAUGE L=165MM	190	165	6	*1.58*	158	*0.35*
995-003-041	OIL LEVEL GAUGE L=190MM	215	190	15 and 30	*3.96 and 7.92*	170	*0.37*
995-003-042	OIL LEVEL GAUGE L=254MM	279	254	50	*13.21*	190	*0.42*
995-003-043	OIL LEVEL GAUGE L=280MM	305	280	100	*26.42*	199	*0.44*

Type: NBR, FKM (FPM) on request

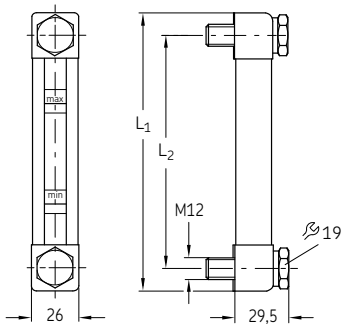

Lubricating nipples

Description

Grease nipples provide a standardized connection to the grease gun and are therefore an important part for servicing and maintaining bearings. They also protect the lubrication point from external influences such as dirt and water.

Features and benefits

- Our standard program includes the most common hydraulic and flat grease nipples according to DIN 74412 and DIN 3404
- Available in galvanized steel or stainless steel

Applications

- Linear guides
- Bearings, bearing blocks
- Drive shafts, cardan shafts
- Axles

Lubricating nipples

Hydraulic grease nipples according to DIN 71412

Straight

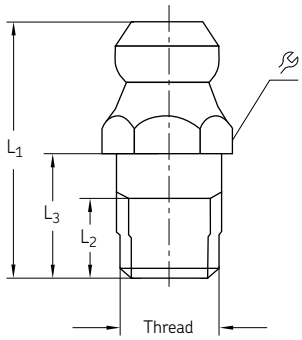

Angle, 45°

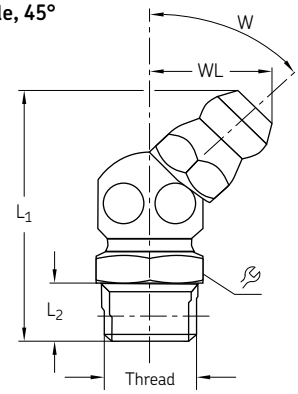

Angle, 90°

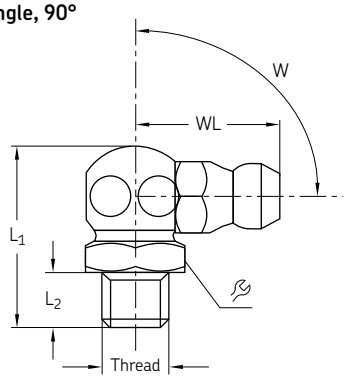

Order number	Designation	Form	Thread	L_1	L_2	L_3	WL		Material	Operating pressure max.		Weight (100 pcs)	
				mm	mm	mm	mm	mm		bar	*psi*	g	*lb*
Steel, galvanized													
251-14040-1	HYDRAULIC LUBR.FITT. ST AR 1/8 Z	Straight	R 1/8	15.5	5.3	5.3	–	11	Steel, galvanized	350	*5 080*	600	*1.32*
996-001-890	HYDRAULIC LUBR.FITT. ST AM 10X1,0 Z	Straight	M10×1	20.7	6	8	–	11	Steel, galvanized	350	*5 080*	500	*1.10*
251-14109-3	HYDRAULIC LUBR.FITT. ST BR 1/4 Z	Angle, 45°	R 1/4	22.5	6.5	–	12	14	Steel, galvanized	350	*5 080*	1 800	*3.97*
251-14045-1	HYDRAULIC LUBR.FITT. ST BR 1/8 Z	Angle, 45°	R 1/8	20.5	5.5	–	11	11	Steel, galvanized	350	*5 080*	1 200	*2.65*
251-14040-2	HYDRAULIC LUBR.FITT. ST CR 1/8 Z	Angle, 90°	R 1/8	19.5	5.5	–	13.5	11	Steel, galvanized	350	*5 080*	1 200	*2.65*
251-14044-8	HYDRAULIC LUBR.FITT. ST CR 1/4 Z	Angle, 90°	R 1/4	22	6.5	–	14	14	Steel, galvanized	350	*5 080*	1 200	*2.65*
Stainless steel													
251-14073-9	HYDR.LUBR.FITT.+CHECK VALVE A2 1/8	Straight	R 1/8	21	7	7	–	11	Steel, 1.4305	400	*5 800*	800	*1.76*
251-14109-2	HYDRAULIC LUBR.FITT. A2 AR 1/4 Z	Straight	R 1/8	15.5	5.3	5.3	–	11	Steel, 1.4305	350	*5 080*	600	*1.32*
251-10309-1	HYDRAULIC LUBR.FITT. A2 AR 1/4 Z	Straight	R 1/4	17.5	6.5	6.5	–	14	Steel, 1.4305	350	*5 080*	1 200	*2.65*
251-10780-2	HYDRAULIC LUBR.FITT. A2 AM 10X1,0 Z	Straight	M10×1	15.5	5.3	5.3	–	11	Steel, 1.4305	350	*5 080*	500	*1.10*
251-14063-4	HYDRAULIC LUBR.FITT. A2 BR 1/8 Z	Angle, 45°	R 1/8	25	5.5	–	11	11	Steel, 1.4305	350	*5 080*	1 200	*2.65*
251-14063-9	HYDRAULIC LUBR.FITT. A2 CR 1/8 Z	Angle, 90°	R 1/8	19.5	5.5	–	13.5	11	Steel, 1.4305	350	*5 080*	1 200	*2.65*

Button-head grease nipples according DIN 3404

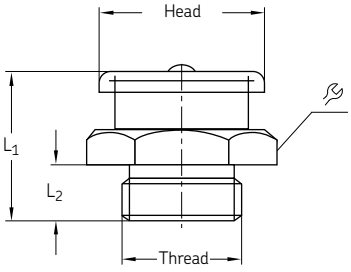

Order number	Designation	Head ∅	Thread		Material	Operating pressure max.		Weight (100 pcs)	
		mm		mm		bar	*psi*	g	*lb*
251-14040-5	BUTTON HEAD LUBR.FITT.ST AG 1/8-16Z	16	G 1/8	17	Steel, galvanized	350	*5 800*	1 700	*3.75*
251-14040-4	BUTTON HEAD LUBR.FITT.ST AG 1/4-16Z	16	G 1/4	17	Steel, galvanized	350	*5 800*	1 900	*4.19*
251-10309-2	BUTTON HEAD LUBR.FITT.ST AG 3/8-16Z	16	G 3/8	17	Steel, galvanized	350	*5 800*	2 000	*4.41*
251-14063-1	BUTTON HEAD LUBR.FITT.ST AG 1/4-22Z	22	G 1/4	22	Steel, galvanized	350	*5 800*	4 000	*8.82*
251-14040-3	BUTTON HEAD LUBR.FITT.ST AG 3/8-22Z	22	G 3/8	22	Steel, galvanized	350	*5 800*	4 000	*8.82*
251-14045-8	BUTTON HEAD LUBR.FITT.ST AM10X1,0-16Z	16	M10×1	22	Steel, galvanized	350	*5 800*	1 700	*3.75*

Lubricating nipples

Lubrication fitting block

532-32248-1

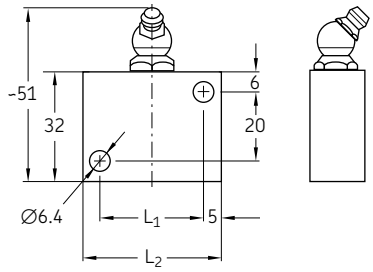

532-32454-1

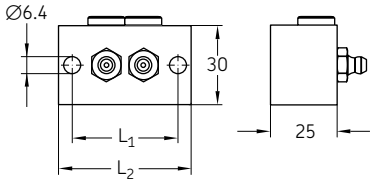

Order number	Designation	Ports for lubricating nipples	L_1	L_2	Material	Operating pressure max.		Weight	
			mm	mm		bar	*psi*	g	*lb*
532-32248-1	LUBR.FITT.BLOCK W.1 FITT. R1/8 45 DEGREE	1	30	40	Steel, galvanized	400	*5 800*	160	*0.35*
504-37184-2	LUBR.FITT.BLOCK W.1 FITT. R1/4" 90 DEGREE	1	30	40	Steel, galvanized	400	*5 800*	217	*0.48*
504-37210-1	LUBR.FITT.BLOCK 2 FITT. R1/8	2	40	50	Steel, galvanized	400	*5 800*	132	*0.29*
504-37211-1	LUBR.FITT.BLOCK 3 FITT. R1/8	3	60	70	Steel, galvanized	400	*5 800*	177	*0.39*
532-32454-1	LUBR.FITT.BLOCK W. 2 FITT. R1/8	2	40	50	Steel, galvanized	400	*5 800*	331	*0.73*
432-70024-1	LUBR.FITT.BLOCK 2 CONN.R1/8 HORIZ./VERTIC	2 [1)]	40	50	Steel, galvanized	400	*5 800*	236	*0.52*

[1)] Two lubricating nipple connections; corresponding tapered grease nipple order no. 251-14045-1

Holder with lubricating nipple and fitting

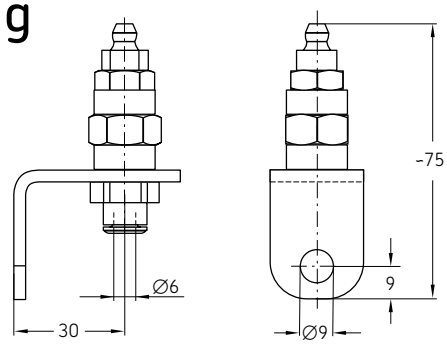

Order number	Designation	Prots for lubricating nipples	L_1	Material	Operating pressure max.		Weight	
			mm		bar	*psi*	g	*lb*
532-32131-1	HOLDER W.HYDR.LUBR.FITTING	1	40	Steel, galvanized	400	*5 800*	93	*0.21*

Lubricating nipples

Lubrication nipple manifolds

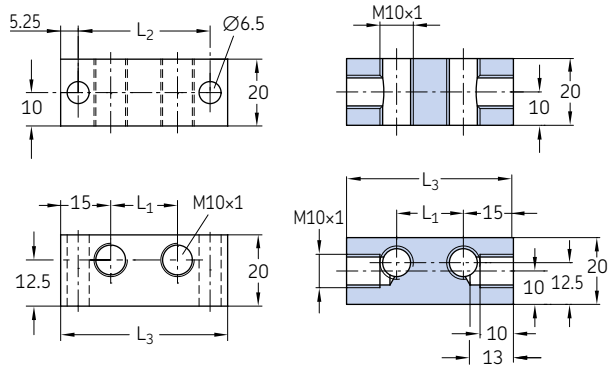

Order number	Designation	L_1	L_2	L_3	Number of threaded holes	Material	Operating pressure max.		Weight	
		mm	mm	mm			bar	*psi*	g	*lb*
871-340-006	LUBRICATION BAR 1x M10x1	–	19,5	30	1	Steel, galvanized	400	*5 800*	72	*0.16*
871-340-008 [1]	LUBRICATION BAR 2x M10x1	–	19,5	30	1	Steel, galvanized	400	*5 800*	70	*0.15*
871-360-006	LUBRICATION BAR 2x M10x1	20	39,5	50	2	Steel, galvanized	400	*5 800*	120	*0.26*
871-360-008 [1]	LUBRICATION BAR 4x M10x1	20	39,5	50	2	Steel, galvanized	400	*5 800*	120	*0.26*
871-380-006	LUBRICATION BAR 3x M10x1	20	40	70	3	Steel, galvanized	400	*5 800*	180	*0.40*
871-380-008	LUBRICATION BAR VA 3x M10x1	20	40	70	3	Stainless steel 1.4301	400	*5 800*	180	*0.40*
871-390-020	LUBRICATION BAR 10x M10x1	20	199,5	210	10	Steel, galvanized	400	*5 800*	530	*1.17*
871-390-023	LUBRICATION BAR 13x M10x1	20	200	270	13	Steel, galvanized	400	*5 800*	685	*1.51*

[1] Nipple connection; corresponding tapered grease nipple with valve, order no. 996-001-890

Lubricating nipple box

Thread	Type	Quantity
M6x1	straight	30
M8x1	straight	20
M10x1	straight	10
G 1/8	straight	10
M6x1	45°	5
M8x1	45°	10
M10x1	45°	5
G 1/8	45°	5
M6x1	90°	5
M8x1	90°	10
M10x1	90°	5
G 1/8	90°	5

Order number	Designation	Material	Operating pressure max.	
			bar	*psi*
LAGN 120	LUBRICATION NIPPLE BOX LAGN 120	Steel, zinc plated, hardened and blue chromed	400	*5 800*

Filters

Description

These easy-to-service lubricant filters consist of a housing and an integrated screen. Grease filters have pressure ratings up to 400 bar (5800 psi) and allow flow rates up to 24 dm^3/hour (6.3 US gal/hour), oil and fluid grease filters allow 2 l/min.

Galvanized and chromate-treated lubricant filter units are available with hydraulic lubrication fittings for lubrication pump reservoir filling. They are also suitable for upstream installation in lubrication systems with divider valves and for outlet connection with outside diameters of 6 mm.

Features and benefits

- Prevents system or component failures and extends system life to significant reduction of solids
- Economical, reliable and maintenance-friendly operation
- Compact and modular design mountable directly into pipes
- Wide range of volumetric flow levels and grades of filtration
- Optimized service handling by replacing of filter elements only
- Dirt monitoring of filter elements as an option
- Oil, fluid grease and grease filters

Applications

- General mechanic and plant engineering
- Ship building and offshore industry
- Pulp and paper industry
- Heavy industry

Screen filters for oil and fluid grease

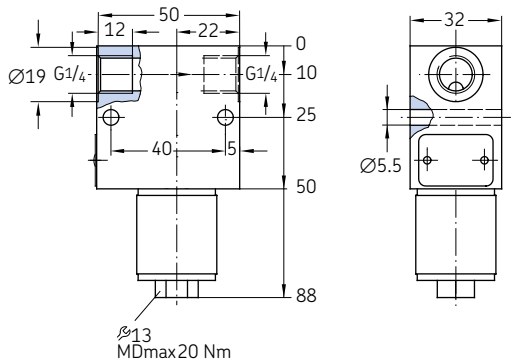

Order number	Designation	Lubricant	Filter rating	Connection thread	Material	Operating pressure max.		Weight	
			µm			bar	*psi*	kg	*lb*
213-870	FILTER	FLUID GREASE NLGI CLASS 000, 00	63	G 1/4	Aluminum	60	*870*	0,31	*0.68*
213-870F	FILTER	FLUID GREASE NLGI CLASS 000, 00	160	G 1/4	Aluminum	60	*870*	0,31	*0.68*
213-880	FILTER	OIL	25	G 1/4	Aluminum	60	*870*	0,31	*0.68*
213-930F	FILTER	FLUID GREASE NLGI CLASS 000, 00	160	G 1/4	Aluminum	60	*870*	1,27	*2.80*

Filter elements for oil and fluid grease filters

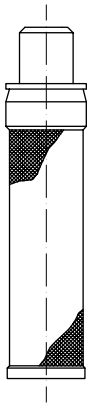

Order number	Designation	Lubricant	Filter rating	Operating pressure max.	
			µm	bar	*psi*
213-870.U1	FILTER ELEMENT FOR 213-870	Fluid grease NLGI class 000, 00	63	60	*870*
213-870.U2	FILTER ELEMENT FOR 213-870F	Fluid grease NLGI class 000, 00	160	60	*870*
213-880.U1	FILTER ELEMENT FOR 213-880	Oil	25	60	*870*
213-870.U2	FILTER ELEMENT FOR 213-930F	Fluid grease NLGI class 000, 00	160	60	*870*

Screen filters for grease

528-36045-6

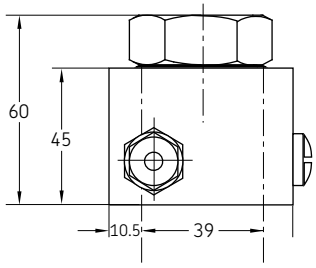

628-36062-3

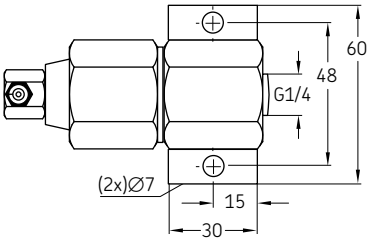

628-25531-2

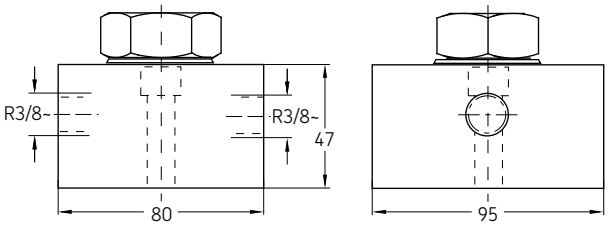

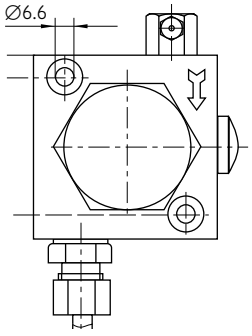

Order number	Designation	Tube ØD	Thread	Material	Operating pressure max.		Weight	
		mm			bar	*psi*	g	*lb*
628-36062-3	Type SF 1-G 1/4 + 90° Nipple	–	G 1/4	Steel, galvanized	350	*5 080*	540	*1.19*
628-26452-2	Type SF 1-G 1/4	–	G 1/4	Steel, galvanized	350	*5 080*	440	*0.97*
428-21544-1	Coarse strainer (replacement part)	–	–	Steel, galvanized	350	*5 080*	2	*0.005*
528-36045-6	Filter unit with nipple and tube connection	6	–	Steel, galvanized	350	*5 080*	1 400	*3.09*
528-31341-3	Filter unit G 1/4 female	–	G 1/4	Steel, galvanized	400	*5 800*	1 280	*2.82*
628-25531-2	Filter unit G 3/8 female	–	G 3/8	Steel, galvanized	400	*5 800*	2 470	*5.45*

Grease filter accessories

Filter elements for grease filter units

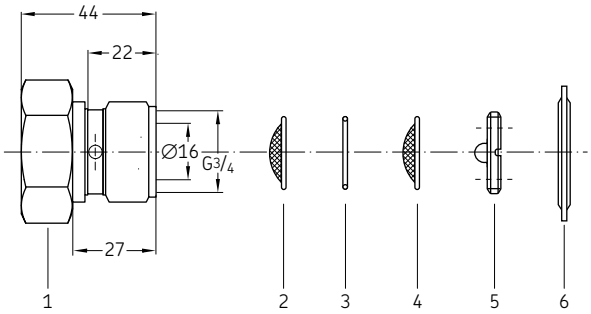

Order number	Designation	Item number	Material	Operating pressure max.		Weight	
				bar	*psi*	g	*lb*
428-21543-2	Hollow screw	1	Steel, galvanized	350	*5 080*	284	*0.63*
428-21544-1	Coarse strainer, fineness of filtration 410 µm	2	Brass	350	*5 080*	2	*0.005*
428-21546-2	Spacing ring	3	Spring steel	350	*5 080*	2	*0.005*
428-21545-1	Fine strainer, fineness of filtration 270 µm	4	Brass	350	*5 080*	2	*0.005*
303-17546-1	Threaded ring	5	Steel	350	*5 080*	12	*0.03*
220-12238-3	Usit sealing ring	6	NBR	350	*5 080*	7	*0.02*

Brushes

Description

Brushes are used as lubricant applicators in lubrication systems. Regardless of the type of lubrication system, the applicators are always located at the end of the line and directly at the lubrication point. They are a simple and inexpensive solution for many applications, such as in chain lubrication. When using a brush, the entire chain is evenly coated with a protective film of lubricant. This keeps the chain supple and protects it from corrosion.

Features and benefits

- Simple and inexpensive solution for many lubrication applications
- Accurate dosage, regardless of oil viscosity and flow resistance
- Lubricates the entire conveyor chain, not just the connecting points of the chain links

Applications

- Conveyors for sorting, cleaning, cooking and pasteurizing fruits and vegetables
- Dryers, smokers and conveyors for meat processing
- Conveyors for material transport
- Ovens, boilers, dryers
- Freezers

UC, 233, 068874

UC-1066-10

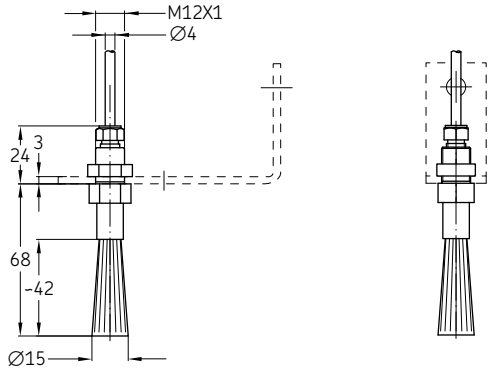

UC-1066-14

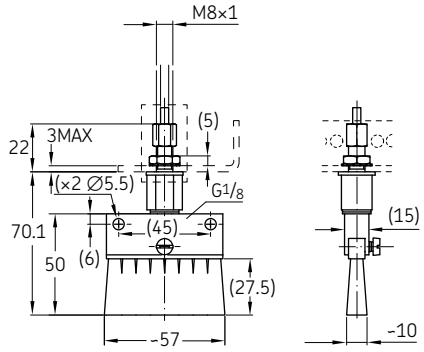

Order number	Designation	Shape	Tube ØD	Shape size	Temperature		Material	Fixation	Weight	
				mm	°C	°F		mm	g	lb
UC-1066-01	OIL BRUSH BRISTLE, 55x16	Rectangle	4 mm	55×16	10 to 60	*50 to 140*	Bristle	Ø8,5	110	*0.24*
UC-1066-02	OIL BRUSH MS, 55x16	Rectangle	4 mm	55×16	10 to 200	*50 to 392*	Brass	Ø8,5	160	*0.35*
UC-1066-03	OIL BRUSH BRISTLE, D30	Circle	4 mm	Ø30	10 to 60	*50 to 140*	Bristle	Ø19	85	*0.19*
UC-1066-04	OIL BRUSH BRISTLE, D15	Circle	4 mm	Ø15	10 to 60	*50 to 140*	Bristle	Ø12,5	45	*0.10*
UC-1066-05	OIL BRUSH PA6, D15	Circle	4 mm	Ø15	10 to 80	*50 to 176*	Polyamide 6.6	Ø12,5	45	*0.10*
UC-1066-06	OIL BRUSH PA6, 55x16	Rectangle	4 mm	55×16	10 to 80	*50 to 176*	Polyamide 6.6	Ø12,5	45	*0.10*
UC-1066-10	OIL BRUSH MS, D15	Circle	4 mm	Ø15	10 to 200	*50 to 392*	Brass	–	59	*0.13*
UC-1066-14	OIL BRUSH MS, 55x16	Rectangle	4 mm	55×16	10 to 300	*50 to 572*	Brass	–	–	–
233-14419-1	OIL BRUSH BZ MODEL SPF 57 G 1/8	Rectangle	G 1/8	55×16	10 to 200	*50 to 392*	Brass	2×Ø5,5	*62*	*0.14*
233-13651-1	OIL BRUSH MS L=CA 47MM R1/8	Circle	R 1/8	Ø20	10 to 200	*50 to 392*	Brass	Ø20	*20*	*0.04*
233-13651-6	OIL BRUSH V2A MODEL SPR16/30/53 G 1/8	Circle	G 1/8	Ø16	10 to 200	*50 to 392*	Stainless steel	Ø20	*35*	*0.08*
233-13651-7	OIL BRUSH V2A MODEL SPR30/45/70 G 1/8	Circle	G 1/8	Ø30	10 to 200	*50 to 392*	Stainless steel	Ø20	45	*0.10*
068874	BRUSH	Circle	1/8 NPT	Ø15	10 to 80	*50 to 176*	Nylon	Ø20	*20*	*0.04*

Support for brushes

AC-2879

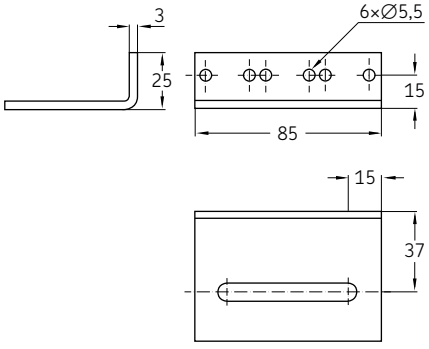

AC-3398

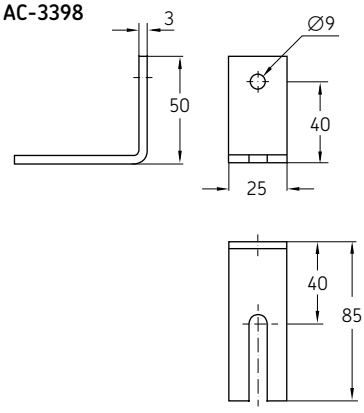

UC.1010.100

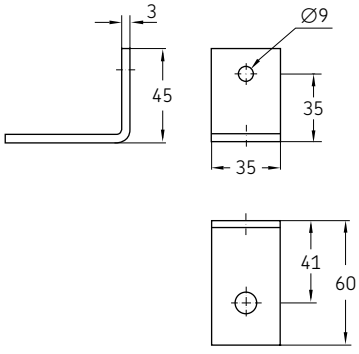

Order number	Designation	Suitable for brush	Temperature		Material
			°C	°F	
AC-2879	SUPPRT FOR BRUSH	UC-1066-01, -02, -06, -14	10 to 80	*50 to 176*	Steel
AC-3398	SUPPRT FOR BRUSH	UC-1066-04, -05, -10	10 to 80	*50 to 176*	Steel
UC.1010.100	SUPPRT FOR BRUSH	UC-1066-03	10 to 80	*50 to 176*	Steel

Tools

Description

The tools shown in the following chapter considerably improve and professionalize assembly, maintenance and testing work on lubrication systems.

- Hand-operated bending tools are available for bending steel pipes in the outer diameters of 4, 6, 8, 10 mm; machine-operated bending devices should be used for larger diameters or quantities
- Claw groove tool can be used to cut the metal pipe to length in one step and to produce the exact geometric shape of the claw groove; a claw groove is necessary for the three O-ring connection fittings
- The hand lever grease gun can be optimally used for functional testing and pressure testing of small central lubrication systems (preferably progressive systems) and progressive metering devices; it is equipped with:
  - High-pressure hose 1 m long
  - Glycerin damped manometer 0–400 bar, 63 mm diameter
  - Union nut and cutting ring for connection to cutting ring fittings for pipe ∅ 6 mm

Features and benefits

- Simple and proven design for use with all lubrication systems
- Manual tools, no additional energy source required
- Professional tools to achieve the right quality result

Applications

- Lubrication system installation
- Lubrication system startup
- Lubrication system maintenance

Pipe cutter

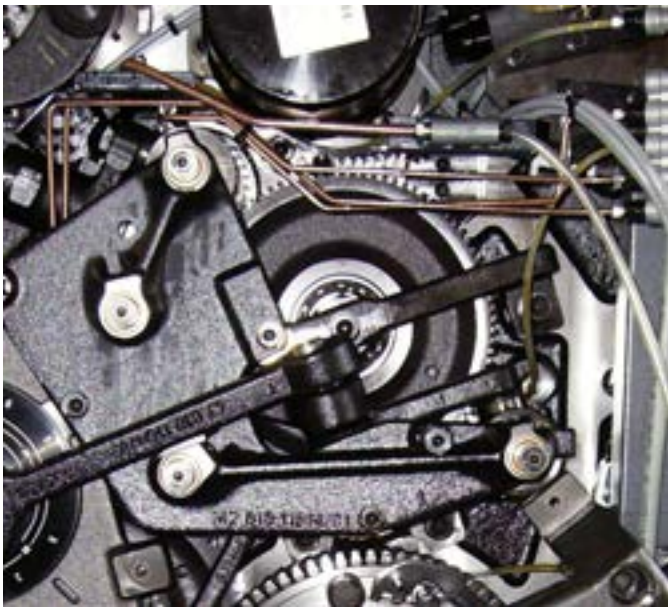

Description

This manual pipe cutter is particularly suitable for pipes made of copper, brass, light metal and hard plastic, as well as for steel and stainless steel pipes with outside diameters from 3 to 35 mm and a maximum cutting depth of 2.5 mm.

Features and benefits

- Optimal hold of the tube when cutting with two guide rollers
- Combines accuracy with ease of use
- Optimal size, light weight

Applications

- Metal and plastic forming machinery
- Construction machinery
- Agriculture, automation
- Printing

Technical data

Function	manual tube cutter
Material	steel, metal, plastic
Dimensions	145 × 58 × 45 mm *5.70 × 2.28 × 1.77 in*

Order information

Order number	Designation	Tube	Weight	
		∅ mm	g	*lb*
223-10540-1	STEEL PIPE CUTTER	3 - 35	356	*0.78*
223-10540-2	CUTTING COG SR153	3 - 35	6	*0.01*

Tools

Claw groove tool

Description

The manual claw groove tool is suitable for hardened copper, brass, steel and stainless steel tubes with diameters of 4, 6, 8 and 10 mm. It allows the creation of claw grooves on metal pipes that are needed for use with SKF quick connectors.

Features and benefits

- One compact tool for both cutting and grooving
- Combines accuracy with ease of use
- Optimal size, light weight

Applications

- Metal and plastic forming machinery
- Construction machinery
- Agriculture, automation
- Printing

Technical data

Function	manual claw groove tool
Material	steel, metal, plastic
Dimensions	154 × 50 × 50 mm *6.06 × 1.96 × 1.96 in*

Order information

Order number	Designation	Tube	Weight	
		∅ mm	g	*lb*
169-000-336	Pipe cutter 4 mm	4	345	*0.76*
169-000-337	Pipe cutter 6 mm	6	344	*0.76*
169-000-338	Pipe cutter 8 mm	8	349	*0.77*
844-330-006	Cutting ring 4 mm	4	20	*0.044*
844-330-007	Cutting ring 6 mm	6	21	*0.046*
844-330-007	Cutting ring 8 mm	8	21	*0.046*

Claw grooves

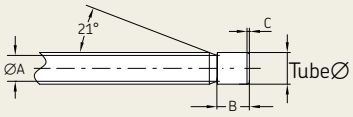

For the use of SKF quick connector fittings, a claw groove is required at the end of the pipe.

Claw groove information

Tube	A	B	C
∅ mm	mm	mm	mm
4	3,1	5	0,3 ... 0,7
6	4,9	6,2	0,4 ... 0,9
8	6,9	6,2	0,5 ... 0,9

Tube bender

Description

The easy-to-use manual tube bender is designed for pipe diameters of 6, 8 and 10 mm and has a bending radius range from 1-180° with a visible, marked scale featuring 15° steps. The bender is suitable for use with hardened copper, steel and stainless steel tubes.

Features and benefits

- Designed for bending hardened copper, steel and stainless steel
- Provides measurements in inches and millimeters
- Combines accuracy with ease of use
- Optimal size, light weight
- Includes oil-absorbing shoe

Applications

- Metal and plastic forming machinery
- Construction machinery
- Textile machinery
- Agriculture
- Automation
- Printing

Technical data

Function	manual tube bender
Material	steel, metal, plastic
Bending radius	1–180°
Scale	15° steps
Length	260–370 mm *10.23–14.56 in*

Order information

Order number	Designation	Tube	Weight	
		Ø mm	kg	*lb*
223-13700-8	HAND-BENDING MACHINE	6	0,7	*1.54*
223-13700-9	HAND-BENDING MACHINE	8	1,3	*2.86*
223-13700-7	HAND-BENDING MACHINE	10	1,18	*2.60*

Tools

Tube bending fix

Description

Designed for installation on a workbench, the manual tube bending fix is suitable for hardened copper, steel and stainless steel tubes with diameters of 4, 6, 8 and 10 mm. Its bending radius range is 1-180°.

Features and benefits

- One compact tool for workbench assembly with exchangeable bending disks
- Combines accuracy with ease of use
- Optimal size, light weight

Applications

- Metal and plastic forming machinery
- Construction machinery
- Textile machinery
- Agriculture
- Automation
- Printing

Technical data

Function	manual tube bending fix
Material	steel, metal, plastic
Bending radius	1–270°

Order information

Order number	Designation	Tube	Weight	
		Ø mm	kg	*lb*
248-803.20	Tube bending fix	4, 6, 8, 10	1,53	*3.37*
248-803.17	Bending disk	12 (special grooved disk) [1]	0,378	*0.83*
248-803.16	Bending disk	4 (retro fitting set) [2]	0,093	*0.21*

[1] To bend pipes with 12 mm diameter, the special grooved disk **248-803.17** must be ordered in addition to pipe bending device **248-803.20**.
[2] Retro fitting set with grooved disk for older pipe bending devices **248-803.20**.

Tube cutter

Description

This manual tube cutter is particularly suitable for tubes and hoses made of plastic and rubber, including tubes with thin metal layers. It cuts tubes with outside diameters up to 12,5 mm.

Features and benefits

- Combines accuracy with ease of use
- Highly resistant against stress and flexural vibrations
- Small size, light weight

Applications

- Metal and plastic forming machinery
- Construction machinery
- General industry
- Agriculture
- Printing

Technical data

Function	manual hose cutter
Material	steel, metal
Dimensions	175 × 115 × 10 mm *6.88 × 4.52 × 0.39 in*

Order information

Order number	Designation	Tube
		∅ mm
226-12508-5	TUBE CUTTER	1–12,5
226-13095-7	TUBE CUTTER REPLACEMENT BLADES	1–12,5

Grease pump set for pressure and function check

Description

This manual grease pump set for pressure and function check is a perfect tool for lubrication system installation, maintenance or troubleshooting existing systems. Its integrated pressure gauge, hose and fitting enable accurate system function check and help to identify system leaks as well as system blockages. The set includes two different connection options: a hydraulic coupler for grease nipple, and a fitting for connection of tube ∅6 mm.

Features and benefits

- Combines accuracy with ease of use
- Set contains a wide range of fittings
- Robust and reliable tool
- Small size, light weight

Applications

- Metal and plastic forming machinery
- Construction machinery
- General industry
- Agriculture
- Printing

Technical data

Function	grease pump set for pressure and function check
Connections	hydraulic coupler for grease nipple, or fitting for connection of tube ∅6 mm
Material	steel, metal

Order information

Order number	Designation
604-36879-1	PRESSURE AND FUNCTION TESTING SET

Drum plug wrench

Description

The drum plug wrench was developed to simplify the opening and closing of caps and plugs on fluid drums. The model 5841 wrench eliminates the need for cumbersome makeshift tools, such as screwdrivers and hammers. Constructed of safe, non-sparking cast aluminum, the drum plug wrench features a comfortable, textured grip. This cost-effective wrench is suitable for agriculture, construction, industrial, fleet maintenance and vehicle service applications – anywhere that fluid drums are used. It is compatible with standard metal and plastic caps or plugs on 60 l (16 gal) and 200 l (55 gal) drums.

Features and benefits

- Suitable for common cap types – both plastic and metal
- Non-sparking, non-corrosive aluminum construction
- Saves time and effort when loosening and tightening plugs and caps
- Fits large and small caps
- Cost-effective solution
- Simple to use

Applications

- Caps or plugs on 60 l (16 gal) and 200 l (55 gal) drums

Technical data

Function	drum plug wrench
Application	60 l (16 gal) and 200 l (55 gal) drums
Material	aluminum
Wrench	3/4

Order information

Order number	Designation
005841	DRUM PLUG WRENCH

Tools

Socket wrench insert for elbows

Description

This socket wrench insert for elbow fitting mounting allows quick and clean system installation work, especially in machines or in facilities where lubrication lines have to run around many corners and barriers.

Features and benefits

- Combines accuracy with ease of use
- Highly resistant against stress and flexural vibrations
- Small size, light weight

Applications

- Metal and plastic forming machinery
- Construction machinery
- General industry
- Agriculture
- Printing

Technical data

Function	socket wrench insert
Application	elbows with max. width of 11 mm
Material	tool steel
Wrench	1/4
Dimensions	∅24 mm, height 20 mm

Order information

Order number	Designation
917-877	SOCKET WRENCH INSERT FOR ELBOWS

Mounting stud for hose couplings

Description

The mounting stud is an important tool for the self-assembly of threaded joints of high-pressure hoses. With the aid of the stud, it is possible to mount the threaded sleeve in the correct position in the high-pressure hose. This is important because incorrectly mounted sleeves can cause the hose to burst or couplings not to seal.

Features and benefits

- Simple mounting without complex measuring with caliper
- Avoids malfunctions in the central lubrication system due to blocked or burst hose lines
- Avoids errors during hose assembly

Applications

- Hose mounting for nominal diameter 6 mm

Technical data

Function	mounting stud
Hose type	ND 6 mm
Immersion depth	11 mm
Material	galvanized steel
Weight	20 g; *0.05 lbs*
Dimensions	∅10 mm, ∅6 mm, 40 mm

Order information

Order number	Designation
432-23077-1	MOUNTING STUD

Manual grease guns

Description

The right lubricant has to be supplied in the right quantity at the right time in the right quality to the right lubrication point. Particularly contamination during the transfer process, applying too much or too little lubricant and using the wrong lubricant for a lubrication point are common problems and can easily be prevented. The SKF manual lubrication tools are specifically designed and selected to support these processes.

Features and benefits

- Avoid mistakes during manual lubrication with tools that are designed to support the “right” lubrication
- Select the best products for your needs from a wide product portfolio for storage, handling, dosing, labelling, analyzing and applying lubricants

Applications

- Agriculture and forestry industry
- Construction machinery
- Pulp and paper industry
- Renewables industry
- Oil and gas industry
- On-road vehicles
- Heavy industry
- Etc.

Manual grease guns

Manual grease filler guns

Description

The manual cartridge grease gun is ideal for agricultural, industrial and construction industries and for private use. It can be utilized to lubricate directly or as filler pump for automatic lubrication systems. The tool is designed for rough treatment on the job with a cast iron pump head, precision fit plunger and extra heavy follower spring.

Features and benefits

- For use with cartridges and bulk grease
- Knurled body for firm and safe grip
- High-output setting delivers twice the grease per stroke
- High or low pressure for light- or heavy-duty greasing action
- Extension swivels 360° for hard-to-reach fittings
- Plated barrel, head and handle

Applications

- General mechanic and plant engineering
- Agriculture, construction, automotive, trucking
- Heavy equipment
- Wind energy
- General industry

Technical data

Function	manually operated cartridge grease gun
Delivery rate	max. 284 g/min; *10 oz/min*
Cartridge capacity	420 ml; *14.2 fl oz*
Operating temperature	–18 to 50 °C; *0 to 122 °F*
Lubricant	grease up to NLGI 2
Material	steel, metal, plastic

Order information

Order number	Designation	Operation pressure max.		Weight	
		bar	*psi*	kg	*lb*
001013	LEVER GUN	275	*4 000*	2,09	*4.61*
001142	LEVER GUN	400	*5 800*	1,85	*4.08*
001133	PISTOL GUN	414	*6 000*	1,62	*3.57*

Manual grease guns

PowerLuber

Model 1260 Model 1880 Model 1890

Description

PoweLuber Li-ion grease gun familiy is designed to make quick work of lubrication tasks. It contains the rugged simplicity of the 12V, single-speed model, the speed and versatility of the durable 20V, high reatio, two speed design and the advanced technology of the 20V with LCD.

Features and benefits

- Flex hose that comes with anti-kink spring guards on each end and is the ideal size for most lubrication tasks
- Integrated vent valve purges trapped air to help assure easy prime
- The filler nipple facilitates a quick, clean refill for those who prefer to bulk fill their barrel
- Lithium-ion technology is powerful and efficient, delivering an even flow of energy
- LCD display version shows battery charge and grease output in both grams and ounces

Applications

- General mechanic and plant engineering
- Agriculture, construction, automotive, trucking
- Heavy equipment
- Wind energy
- General industry

Technical data

Function	battery-operated grease gun
Operating power	12V or 20 V
Operating pressure	max. 690 bar; *10 000 psi*
Delivery rate	max. 284 g/min; *10 oz/min*
Reservoir capacity	411 g; *14.5 oz*
Operating temperature	–18 to 50 °C; *0 to 122 °F*
Rated current	5.0 A
Lubricant	grease up to NLGI 2
Material	steel, metal, plastic
Weight	3,4 kg; *7.5 lb*

Order information

Order number	Description	Approval
1890	20V Li-ion high-ratio dual output grease gun with single battery	UL
1886	20V Li-ion high-ratio dual output grease gun with single battery, charger and carrying case	UL
1886-E	20V Li-ion high-ratio dual output grease gun with single battery, charger and carrying case	CE
1880	20V Li-ion 2-speed grease gun with multi-funcion LED and single battery	UL
1882	20V Li-ion 2-speed grease gun with multi-funcion LED and single battery, charger and carrying case	UL
1882-E	20V Li-ion 2-speed grease gun with multi-funcion LED and single battery, charger and carrying case	CE
1871	20V Li-ion battery, 2,5 Ah	UL, CE
1872	20V Li-ion battery, 4,0 Ah	UL, CE
1260	12V Li-ion single-speed grease gun with single battery	UL
1262	12V Li-ion single-speed grease gun with single battery, charger and carrying case	UL
1262-E	12V Li-ion single-speed grease gun with single battery, charger and carrying case	CE

Manual grease guns

PowerLuber

20V Li-ion PowerLuber
High-ratio, dual-output design for low- or high-volume lubrication points

Model 1890

20V Li-ion PowerLuber
Two-speed grease gun with multi-function LCD identifying output quantity, battery charge and motor speed

Model 1880

12V Li-ion PowerLuber
Single-speed grease gun

Model 1260

Model 1886 / 1886-E

Model 1882 /1882-E

Model 1262

Model 1888

Model 1884

Model 1264

Full range of high-pressure hoses for all Lincoln PowerLuber models

Model 1218	18 in.	*46 cm*
Model 1224	24 in.	*61 cm*
Model 1230 [2]	30 in.	*76 cm*
Model 1236 [3]	36 in.	*91 cm*
Model 1248HP [4]	48 in.	*122 cm* **(new)**

Included with the PowerLuber

1 Standard on all PowerLuber models
2 Standard on the 12V models
3 Standard on the 20V models 1882 and 1884
4 Standard on the 20V models 1886 and 1888 (new)

Grease coupler [1]
Model 5852

Heavy-duty grease coupler
Model 5845

360 Degree coupler with quick-connect
Model 5849

Carrying strap
Model 1414

Lever-action coupler
Model 5900

Refill pumps

Description

Filling pumps make it easier to top up lubricants in reservoirs of automatic lubrication pumps. By using original barrels, hoses and couplings, it is ensured that no dirt gets into the reservoir during the filling process. Contaminated lubricants that enter the reservoir during manual filling via the open reservoir lid are the greatest risk of malfunctions in a centralized lubrication system.

Depending on the desired degree of automation, the filling pumps can be supplied with manual, compressed air or electric drive.

For longer transport distances, the use of a filling pump on a trolley is recommended.

Features and benefits

- Improved maintenance of all lubrication systems
- Easy-to-use, application-optimized product design
- Quick and professional refilling with contamination prevention, compared to manual grease refilling
- Optimized consumption of refilling barrel lubricants due to use of perfectly suited barrel follower plates
- Wide range of filling pumps for all common reservoir sizes

Applications

- General mechanic and plant engineering
- Agriculture and forestry industry
- Construction machinery
- Pulp and paper industry
- Renewables industry
- Oil and gas industry
- On-road vehicles
- Heavy industry
- Etc.

Filler cylinder

Description

Lubricant outlets of automatic lubrication system pumps can, as an option, be equipped with one suitable filler socket in order to fill the unit using a filling cylinder (cartridge). A filler cylinder is only recommended for systems with low lubricant consumption and reservoir sizes up to 2 kg.

Features and benefits

- Robust and sustainable manual filler pump
- Knurled body for firm and safe grip
- Easy to use

Applications

- General mechanic and plant engineering
- Agriculture, construction, automotive, trucking
- General industry
- Heavy equipment
- Wind energy

Technical data

Function	manually operated cartridge filler cylinder
Reservoir capacity	420 ml; *14.2 fl oz*
Operating temperature	–18 to 50 °C; *0 to 122 °F*
Lubricant	grease up to NLGI 2
Material	steel, metal, plastic

Order information

Order number	Designation	Thread
		mm
Filling cylinder and filling connection for pumps with inlet thread M20×1		
169-000-171	FILLER CYLINDER	–
169-000-174	FILL CONNECTION	M20x1,5
Filling cylinder kit for pumps with inlet thread M22×1		
638-37548-1	KIT:FILLING PUMP,HAND-OPER. 90 DEGREE	M22×1,5
638-37549-2	KIT:FILLING PUMP,HAND-OPER.	M22×1,5

Refill pumps

Manual and pneumatic filling pumps 169

Description

The 169 series of filling pumps is available in manual or pneumatic models that are suitable for barrel sizes of 15, 20, 25 and 50 kg. The pumps are offered in stationary or mobile versions.

Features and benefits

- Easy and cost-efficient filling of pump reservoirs
- No contamination of the lubricant during the filling process
- Steel pump with guided grease follower piston
- Centering cover that positions the pump centrally in the barrel and ensures optimum residual emptying

Applications

- Construction and agriculture vehicles
- Production plants

Technical data

Function	filling pump
Design	manually operated filling pump
Delivery rate	max. 100 g/stroke; *10 oz/stroke*
Design	pneumatically operated filling pump
Delivery rate	max. 1 800 g/min; *3.97 lbs/min*
Ratio	1 : 3
Operating pressure	max. 24 bar; *max. 348 psi*
Air pressure	max. 8 bar; max. *max. 116 psi*
Barrel capacities	15. 20, 25 and 50 kg
Operating temperature	-10 to +40 °C; *14 to 104 °F*
Lubricant	fluid grease and grease up to NLGI 2
Coupling	acc. to ISO 241 B DN6 R 1/4
Hose length	2 m; *6.5 ft*
Material	steel, metal, plastic
Dimensions	max. 550 x 550 x 950 *max. 21.65 x 21.65 x 37.4*

NOTE
For further technical information, technical drawings, accessories, spare parts or product function descriptions, see the following publication available on SKF.com/lubrication

Manual and pneumatic filling pumps 169

Order information

Order number	Designation	Drum	Inner diameter		Lubricant	Delivery rate per stroke		Weight	
		kg	mm	*in*		cm^3	*in^3*	kg	*lb*
169-000-004	MANUAL FILLING PUMP 15L,STATIONARY	15	267	*10.5*	NLGI 1/2	4	*0.25*	4,383	*9.66*
169-000-012	MANUAL FILLING PUMP 10L,STATIONARY	10	236	*9.3*	NLGI 1/2	25	*1.53*	4,68	*10.32*
169-000-016	MANUAL FILLING PUMP 20L,STATIONARY	20	290	*11.4*	NLGI 1/2	25	*1.53*	5,12	*11.30*
169-000-084	MANUAL FILLING PUMP 25L,STATIONARY	25	350 [1)]	*13.8* [1)]	00/000	250	*15.3*	4	*8.82*
169-000-042	MANUAL FILLING PUMP 25L,MOBILE	25	300-335	*11.2-13.2*	NLGI 000-2	45	*2.7*	16,8	*37.04*
169-000-054	MANUAL FILLING PUMP 50L,MOBILE	50	355-387	*14-15.2*	NLGI 000-2	45	*2.7*	10	*22.05*
169-000-342	MANUAL FILLING PUMP 25L,STATIONARY	25	300-335	*11.2-13.2*	NLGI 000-2	45	*2.7*	6,38	*14.06*
169-000-018	FILLING PUMP, PNEUM. 25L, MOBILE	25	300-335	*11.2-13.2*	NLGI 1/2	45	*2.7*	16,8	*37.04*

[1)] **max. outer diameter**

Refill pumps

Manual refilling pump MFP

Description

The MFP is a manual refilling pump specifically designed for applications with NLGI grade 0 to 2 greases. It is intended for use with 18 kg barrels or buckets with or without follower plate. Follower plate is essential to ensure reliable suction and optimal emptying of the barrel while using hard greases. This pump is fitted with a 2-metre long high-pressure hose that features a quick coupling female connector compatible with SKF filling filter often found in SKF Lincoln automatic lubrication system pumps. Additionally, an adaptor for filling Lube-Shuttle cartridges is available as an option. The MFP dispenses a volume of 25 cm^3 per stroke and operates at pressures of up to 60 bar. Two versions of the MFP are available, each tailored for different NLGI grades of lubricants. This market-proven solution, tested under the harsh conditions of Nordic winters, is noted for its high reliability, durability, and ease of use.

Features and benefits

- Market proven design
- Fast to install and easy to use
- Most reliable also under harsh condition
- Fluid grease and grease design versions available
- Steel pump with guided grease follower piston
- Centering cover that positions the pump centrally in the barrel and ensures optimum residual emptying

Applications

- Refill pump suitable for many industries
- MMPC, construction vehicles, breakers and hammers
- Food and beverage, agriculture vehicles, attachments
- Utility service vehicles, lifting and telehandlers
- Forestry machines, attachments

Technical data

Function principle	manually operated refilling pump	
Lubricants	fluid grease, grease up to NLGI grade 2	
Number of outlets	1	
Metering quantity per outlet	25 cm^3/stroke	*9.84 in^3/stroke*
Suitable barrel sizes	18 kg (1/8 barrel)	
Operating temperature	–30 to +55 °C	*–22 to 130 °F*
Operating pressure	max. 60 bar	*70 psi*
Hose length	2 m	*6.5 ft*
Hose end thread	G1/4	
Coupling	female 2500 series QC	
Materials		
Pump body	zinc plated steel	
Follower plate	steel plate, POM, NBR	
Lid	painted steel	
Lid fixing	POM	
Suitable barrel diameters	min. 270 mm	*min. 10.63 in*
	max. 300 mm	*max. 11.8 in*
Dimensions (without follower plate)	550 × 380 × 320 mm; *21.65 × 14.96 × 12.59 in*	
Weight (without follower plate)	7 kg	
Operating position	upright	

NOTE
For further technical information, technical drawings, accessories, spare parts or product function descriptions, see the following publication available on SKF.com/MFP
19990 EN

Manual refilling pump MFP

Order information

Order number	Designation
11600330	SKF manual filling pump for NLGI 000-0 fluid grease (18 kg barrels)
11600340	SKF manual filling pump for NLGI-2 grease incl. follower plate (18 kg barrels)
11770464	Lube-Shuttle cartridge filling adapter for MFP pump

11770464

Accessories

Order number	Designation	Inlet	Outlet
11650850	MALE COUPLING QC2520 G1/4	G1/4 female	QC2500 male
995-001-096	MALE COUPLING QC60 G1/4 STEEL	QC60 male	G1/4 female
995-001-500	FEMALE COUPLING QC60 G1/4	G1/4 female	QC60 female
LAGT 18-50	GREASE TROLLEY FOR 18 KG DRUMS	–	–
11396555	FF-500-M22-2500 FILLING FILTER	QC2520 male	M22×1.5 male
11770462	FF-500-G1/4-2500 FILLING FILTER	QC2520 male	G1/4 male
11396557	FF-500-M22-G1/4 FILLING FILTER	G1/4 male	M22×1.5 male
11396558	FF-500-G1/4-G1/4 FILLING FILTER	G1/4 male	G1/4 male
11770415	SPARE FILTER CARTRIDGE 250MIC	–	–
11770417	SPARE FILTER CARTRIDGE 500MIC	–	–
11600400	MFP pump repair kit	–	–

11396555

11396557

Refill pumps

Air-operated barrel pump Lubrigun

Description

The performance-proven Lubrigun air-operated pump units are found in industrial facilities worldwide. Ideal for high-pressure applications, these pumps include a powerful displacement air motor with 63,5 mm (*2.5 in*) stroke. Lubrigun pumps are available for 50 kg (*120 lb*) and 180 kg (*400 lb*) drums. For dual-line applications, the Lubrigun utilizes a pump hoist, return-line connection, low-level switch, maintenance unit and connection hoses.

Features and benefits

- Lightweight, zinc head casting design for corrosion resistance
- One-piece pump outlet body withstands high lubricant pressure
- Double-acting design provides high pressure and uniform delivery on both up and down strokes
- Integrated, patented muffler minimizes noise
- Pre-lubricated air motor requires no external oiler
- Pneumatically assisted mechanical air valve for positive priming
- Hardened steel plunger and bushing resist abrasion and extend pump life

Applications

- Power plants
- Cement plants
- Mining equipment
- Food and beverage processing plants

Technical data

Function	air operated piston pump for barrels	
Operating temperature	–34 to +93 °C	*-30 to +200 °F*
Operating pressure	max. 515 bar	*7 500 psi*
Lubricant	grease: NLGI 1 and 2	
Cycles per minute	max. 120	
Metering quantity	5,7 cm^3/cycle	*0.35 in^3/min*
Pressure ratio	50:1	
Lubricant outlet connection	1/4 NPTF	
Dimensions with pump lift	950 x 700 x 2800 mm; *374 x 275 x 1102 in*	
Mounting position	vertical	

NOTE
For further technical information, technical drawings, accessories, spare parts or product function descriptions, see the following publication available on SKF.com/lubrication

Air-operated barrel pump Lubrigun

Order information

Order number	Designation	Barrel size	
		kg	*lb*
82054	Lubrigun barrel pump	180	*400*
82050	Lubrigun barrel pump	50	*120*

001709

Order information

Order number	Designation
001709	Pump hoist without pump
274681	Single-post primer without pump

274681

Refill pumps

Compact grease transfer pump GTP-C

Description

To use the GTP-C, simply turn on the main switch located on the terminal box. The function status is shown by two LEDs, with green indicating power supply and yellow indicating the pump's operational readiness. The GTP-C will deliver grease continuously while the button on the wired remote control is pressed. The grease in the drum or pail is drawn below the follower plate and fed by the pump. When the follower plate reaches the bottom of the drum, it activates an empty signal switch that automatically shuts off the pump. Replacing the empty grease drum is simplified by opening the vent.

Features and benefits

- Purely electric drive
- Filling hose with quick-release coupling or connection with M30x2 thread
- High delivery volume up to 1 100 cm³/min (0.29 gal/min)
- Powerful performance with no air connection required
- Fast filling even at low temperatures
- Time- and effort-saving alternative to manual filling
- Easy-to-use in mobile applications

Applications

- Wind energy
- Service and maintenance trucks
- Mining and construction vehicles
- General mechanical and plant engineering

Technical data

Function	electrically operated gerotor pump
Delivery rate	max. 1 100 cm³/min; *67 in³/min*
Barrel capacities	5 gal. (only 799-000-3161) 25 kg / 30 l 50 kg / 60 l 180 kg / 216 l
Operating temperature	-10 to +50 °C; *14 to 122 °F*
Lubricant	grease up to NLGI 2
Outlet fitting	quick-release coupling or connection with M30×2 thread
Rated delivery pressure	max. 100 bar; *1450 psi*
Material	steel, metal, plastic
System voltage	230 V AC/50 or 120V AC/60 Hz
Motor power	0,37 kW
Protection class	IP54
Insulation class	F
Electrical connection	grounded plug, 3 m *(9.8 ft)* cable - motor protection via circuit breaker
Activation	wired remote control (5/10/15 m)
Dimensions (pump only)	250 x 597 mm; *9.13 x 26.38 in*

NOTE
For further technical information, technical drawings, accessories, spare parts or product function descriptions, see the following publication available on SKF.com/lubrication:
14970 EN; 951-181-023-EN

Order information

Order number	Description	Approval
799-000-3161	Filling pump mounted on frame with follower plate in transport pail, 120 V AC/60 Hz	UL
799-000-3109	Filling pump mounted on frame with follower plate in transport pail, 230 V AC/50 Hz, 25 kg reservoir	CE
799-000-3119	Filling pump mounted on frame with follower plate in transport pail, 230 V AC/50 Hz, 50 kg reservoir	CE
799-000-3118	Filling pump mounted on frame with follower plate in transport pail, 230 V AC/50 Hz, 180 kg reservoir	CE

Refill pumps

Grease transfer pump GTP

Description

Pump frames for grease drum sizes of 50 to 200 kg are available on request. The pump is ready for operation after switching on the main switch on the terminal box. The function status is shown by 2 LEDs. Green indicates the power supply and yellow the pump's operational readiness. The pump delivers grease.

Features and benefits

- Powerful even where only power connection (no air connection) is available
- Time- and effort-saving alternative to manual filling
- Filling hose with quick-release coupling or connection with M30x2 thread
- High delivery volume up to 2 500 cm³/min *(152 in³/min)*
- Fast filling even at low temperatures
- Easy-to-use in mobile applications
- For pressure up to 100 bar

Applications

- General mechanical and plant engineering
- Construction and aggriculture
- Wind energy
- Vehicles
- Railway

Technical data

Function	electrically operated gerotor pump
Delivery rate	max. 2 500 cm³/min; *152 in³/min*
Barrel capacities	25 kg/30 l (futher on request)
Operating temperature	–10 to +50 °C; *14 to 122 °F*
Lubricant	grease up to NLGI 2
Outlet fitting	quick-release coupling or connection with M30×2 thread
Rated delivery pressure	max. 100 bar; *1 450 psi*
Material	steel, metal, plastic
System voltage	230 V AC/50 Hz
Motor power	0,75 kW
Protection class	IP54
Insulation class	F
Electrical connection	grounded plug, 3 m cable - motor protection via circuit breaker
Activation	wired remote control (5/10/15 m)
Dimensions (pump only)	250 x 993 mm; *6.8 x 39 in*

NOTE
For further technical information, technical drawings, accessories, spare parts or product function descriptions, see the following publication available on SKF.com/lubrication:
14657 EN; 810-53479-EN

Order information

Order number	Description	Approval
24-1560-3576	Filling pump with transport bracket and plug and socket coupling	CE
24-1560-3595	Filling pump **without** transport bracket and plug and socket coupling	CE
24-1722-2557	Pump frame with follower plate for grease drums 25 kg/30 l with empty signal	CE
24-1722-2559	Pump frame with follower plate for grease drums 25 kg/30 l, without empty signal	CE

Refill pumps

Electric filling pump EFFP

Description

The EFFP electric grease filling pump is a piston pump for grease drum sizes from 16 to 25 kg. The delivery stroke is generated at the lower end of the intake tube by a delivery piston that is controlled by an electrically driven eccentric shaft. The pump is activated using an ON/OFF switch attached to the terminal box.

Features and benefits

- Suitable for pressures up to 250 bar
- Suitable for oil, fluid grease and grease
- Integrated automatic shut-off function for use with grease guns

Applications

- Wind energy
- Stationary and mobile vehicles

Technical data

Function	electrically operated piston pump
Delivery rate	max. 400 cm^3/min; *24 in^3/min*
Barrel capacities	16 and 25 kg
Operating temperature	–10 to +60 °C; *14 to 140 °F*
Lubricant	oil, fluid grease and grease up to NLGI 2
Outlet fitting	G 1/4
Automatic shut-off, fixed	250 bar
Pressure regulating valve, fixed	300 bar
Restart after pressure relief	< 150 bar
Material	steel, metal, plastic
System voltage	230 V AC/50 to 60 Hz
Motor power	370 W
Protection class	IP54
Insulation class	F
Intake current	2,73 A
Electrical connection	grounded plug, 3 m cable - motor protection via circuit breaker
Dimensions (pump only)	550 x 900 mm; *21.7 x 35.4 in*

NOTE

For further technical information, technical drawings, accessories, spare parts or product function descriptions, see the following publication available on SKF.com/lubrication:
13149 EN; 951-180-061-EN

Electric filling pump EFFP

Order information

Order number	Designation	Weight kg	Weight *lb*
24-1560-3577	EL. BARREL PUMP EFFP	34,5	*76.07*
24-1560-3578	EL. BARREL PUMP EFFP WITH SIGNAL INPUT	34,9	*76.95*
24-1868-4334	HIGH-PRESSURE HOSE, MAX. 275 BAR, 5 M	–	–
412-423W	SCREW UNION G1/4A 412-423W	–	–
995-001-500	COUPLING BELL G1/4	–	–
995-000-705	COUPLING PLUG G1/4	–	–
169-000-031	GREASE GUN	–	–

Accessories for EFFP

Order number	Designation	Drums kg	Weight kg	Weight *lb*
24-1722-2551	CARRYING FRAME WITH HANDLE AND WHEELS	16/25	16,6	*36.60*
24-1722-2552	CARRYING FRAME WITH WHEELS	16/25	15	*33.08*
24-1952-2034	FOLLOWER PLATE ∅ 265-285	16/25	0,7	*1.54*
24-1952-2035	FOLLOWER PLATE ∅ 285-305	16/25	1	*2.21*
24-1952-2036	FOLLOWER PLATE ∅ 305-350	16/25	1,5	*3.31*

Cross reference list

Historical order number	SKF Lincoln order number
226-12490-3	898-610-000
226-12557-1	941-206-104
226-12557-2	941-209-104
226-12557-7	941-210-104
226-13095-1	898-710-001
226-13095-6	179-990-186
401-013-111	222-12599-9
401-016-132	222-12521-2
401-016-191	222-12578-5
401-021-111	222-13678-4
404-301	223-14083-3
404-302	223-13032-1
404-403	223-13069-1
404-403W	223-12270-8
404-404	223-12531-8
404-405W	223-13021-4
404-413	223-12271-8
404-425	223-13069-2
406-301	223-12295-3
406-302	223-12373-9
406-302-S3	223-14082-5
406-303	223-14234-7
406-323	223-13766-9
406-331	223-12295-2
406-332	223-12374-9
406-332-S3	223-13638-2
406-333	223-14129-1
406-403	223-12571-2
406-403-S3	223-14184-5
406-403W	223-13016-3
406-403W-S3	223-13658-2
406-404	223-12483-2
406-405	223-12485-8
406-405W	223-13048-1
406-406	223-12482-9
406-407	223-12484-2
406-409	223-13050-4
406-411	223-12481-4
406-413W	223-12477-1
406-413W-S3	223-13614-7
406-415W	223-12380-6
406-416	223-12368-4
406-423	223-12271-7
406-423-S3	223-13658-5
406-423W	223-12270-7
406-423W-S3	223-13614-9
406-425	223-13021-3
406-433	223-13023-1
406-433-S3	223-13658-6
406-435	223-13023-3
406-435-S3	223-13677-2
406-443	223-12533-9
406-443-S3	223-13658-7
406-445	223-13023-2
406-445-S3	223-13677-4
406-446	223-14181-3
406-463W	223-13766-6
408-301	223-12295-6
408-302	223-13032-4
408-403	223-12361-6
408-403W	223-12477-6
408-405	223-12362-8
408-405W	223-14240-5
408-407	223-12484-6
408-408	223-12531-9
408-408-S3	223-13615-3
408-409	223-12409-6
408-411	223-12481-6
408-413W	223-10080-3
408-416	223-12368-6
408-423W	223-12270-9
408-423W-S3	223-13614-9
408-425	223-12362-4
410-301	223-12295-8
410-302	223-13032-6
410-323	223-14304-2
410-403	223-14129-4
410-403W	223-12272-9
410-403W-S3	223-14420-7
410-404	223-12483-8
410-405W	223-13048-5
410-407	223-13057-5
410-409	223-12409-9
410-410	223-12531-2
410-410-S3	223-13615-6
410-411	223-13028-2
410-413W	223-14214-4
410-416	223-12368-8
410-425	223-12485-2
410-433W	223-10313-7
410-443-S3	223-14420-4
410-463	223-10313-2
412-301	223-12296-1
412-302	223-12373-2
412-403W	223-12360-8
412-411	223-12481-8
412-412	223-13732-8
412-416	223-13698-4
412-423W	223-12477-9
415-301	223-12296-9
415-302	223-12374-8
415-403W	223-12361-9
415-405W	223-13021-7
415-407	223-12563-2
415-409	223-12409-8
415-415	223-12531-6
415-415-S3	223-12454-8
415-416	223-12564-2
415-433W	223-13621-8
418-301	223-12583-1
418-302	223-12374-7
418-403W	223-13766-1
418-403W-S3	223-14420-8
418-416	223-12564-8
418-418	223-13732-4
422-407	223-13057-4
428-403W	223-13610-9
428-413W	223-14214-9
441-008-511	223-13021-1
441-008-511-S3	223-13715-1
471-110-163	223-13028-4
471-112-162	223-12286-8
443-215-001	223-12562-2
443-306-341	223-14171-1
443-308-351	223-14102-3
443-406-061	223-14190-6
443-408-081	223-14190-7
443-410-101	223-13040-9
443-412-121	223-13761-5
443-415-151	223-14190-5
445-516-081	223-12284-7
445-519-041	223-13629-1
445-519-061	223-12479-5
445-529-041	223-12480-2
445-531-061	223-12369-7
445-531-062	223-12480-7
445-713-151	445-713-152
445-739-151	445-739-152
445-808-351	223-13040-1
445-810-371	223-14189-1
460-706-001	223-10297-5
460-710-001	223-10297-6
466-411-001	223-10530-4
466-413-001	223-13702-7
466-416-001	223-13702-1
466-418-001	223-13702-6
471-106-163	223-13655-1
471-110-163	223-13655-7
471-112-163	223-14268-4
504-410	223-12542-2

Cross reference list

Historical order number	SKF Lincoln order number
506-410	223-13705-5
506-412	223-13622-3
506-413	223-10986-1
506-512-VS	506-142-VS
508-410	223-13024-4
508-412	223-13622-7
508-413	223-13024-8
510-412	223-12542-7
96-0203-0058	223-10814-2
96-0204-0058	223-12477-8
96-0222-0058	223-13016-2
96-0223-0058	223-13749-3
96-0308-0060	223-10889-2
96-0328-0058	223-14214-8
96-0408-0058	223-12483-5
96-0506-0060	223-10307-2
96-0510-0060	223-13033-2
96-0706-0060	223-13693-4
96-0708-0060	223-13693-6
96-0710-0060	223-13693-2
96-0722-0060	223-12273-2
96-1108-0058	223-12477-2
96-1110-0058	223-13016-4
96-1111-0058	223-13016-9
96-1112-0058	223-13016-7
96-1113-0058	223-14129-3
96-1116-0058	223-13621-1
96-1117-0058	223-13749-5
96-1120-0058	223-12359-6
96-1121-0058	223-12360-6
96-1508-0060	223-10670-3
96-1511-0060	223-12582-5
96-1523-0060	223-14293-2
96-1532-0060	223-14152-2
96-1533-0060	223-14293-4
96-1545-0060	223-14293-8
96-1610-0060	223-10688-1
96-1612-0060	223-13054-4
96-1622-0060	223-12287-8
96-1623-0060	223-12288-2
96-1643-0060	223-14293-1
96-1653-0060	223-12577-2
96-1654-0060	223-12580-2
96-1656-0060	223-13759-7
96-2118-0058	446-318-001
96-3101-0058	222-13678-2
96-3105-0058	222-12578-9
96-3106-0060	223-14189-6
96-3109-0058	222-13678-8
96-3110-0058	222-12521-8
96-3111-0058	222-11053-1
96-3112-0060	223-13785-8
96-3113-0058	222-13678-3
96-3115-0060	223-14189-7
96-3116-0058	222-12521-5
96-3117-0058	222-12521-6
96-3118-0058	222-12521-4
96-3120-0058	222-12578-4
96-3121-0058	222-12578-8
96-3122-0058	222-12578-3
96-3125-0058	222-12599-3
96-3127-0058	222-12047-8
96-3128-0058	222-12047-4
96-3131-0058	222-12599-5
96-3132-0058	222-13670-1
96-3134-0058	222-12599-6
96-3208-0060	223-10374-3
96-3210-0060	223-14189-5
96-3212-0060	223-14189-9
96-3216-0060	223-14189-2
96-5608-0058	223-13032-3
96-5610-0058	223-12374-6
96-5708-0058	223-12295-5
96-5710-0058	223-12295-9
96-5909-0058	223-13621-6

Historical order number	SKF Lincoln order number
96-6002-0058	223-12533-5
96-6202-0058	223-12533-6
96-6904-0058	223-12563-5
96-7004-0058	223-13629-1
96-7006-0058	223-12479-9
96-7008-0058	223-12479-8
96-7104-0158	223-12480-8
96-7920-0058	223-12285-7
99-0204-0058	223-13658-9
99-0215-0058	223-13715-9
99-0217-0058	223-13715-6
99-0228-0058	223-14184-2
99-2712-0058	223-13639-9
99-5604-0058	223-13638-6
99-5612-0058	223-14082-3
99-5704-0058	223-13639-5
DIN7513-BM5x10	206-12124-3
DIN7513-BM6x16	206-12125-4
DIN912-M4x12-A4	201-13741-1
DIN912-M4x20-8.8	201-12015-5
DIN912-M5x10-A2	201-13608-6
DIN912-M6x16-8.8	201-12019-9
DIN912-M6x25-8.8	201-12018-7
DIN912-M6x60-8.8	201-12019-6
DIN912-M8x16-8.8	201-12021-3
DIN933-M10x40-8.8	200-12523-3
DIN933-M5x12-8.8	200-13092-1
DIN933-M6x16-8.8	200-13022-4
DIN933-M6x20-8.8	200-13022-7
DIN933-M6x25-8.8	200-13022-1
DIN933-M8x20-8.8	200-12553-4
DIN934-M5-8	207-12138-2
DIN934-M6-8	207-12135-5
DIN936-M14x1.5-5	207-12141-1
DIN936-M16x1.5-5	207-12141-8
DIN985-M12-8	207-12516-6
DIN985-M3-6	207-12516-9
DIN985-M8-6	207-12516-1

Index

24-1207-2204 135
24-1560-3577 179
24-1560-3578 179
24-1722-2551 179
24-1722-2552 179
24-1868-4334 179
24-1952-2034 179
24-1952-2035 179
24-1952-2036 179
44-1755-2019 25
44-1755-2029 73
96-0335-0058 43
96-0342-0058 43
96-0508-0060 53
96-0512-0060 53
96-0606-0060 53
96-0608-0060 53
96-0712-0060 53
96-0715-0060 53
96-0718-0060 53
96-0806-0058 62
96-0808-0058 62
96-0810-0058 62
96-0818-0058 62
96-0906-0058 62
96-1114-0058 44
96-1206-0058 43
96-1214-0058 43
96-1406-0060 59
96-1408-0060 59
96-1410-0060 59
96-1412-0058 51
96-1541-0060 59
96-1542-0060 59
96-1543-0060 59
96-1551-0060 59
96-1556-0060 59
96-1633-0060 59
96-1642-0060 59
96-1644-0060 59
96-1652-0060 59
96-1706-0058 62
96-1806-0058 62
96-1808-0058 62
96-2106-0058 52
96-2122-0058 52
96-3102-0058 76
96-3106-0058 76
96-3112-0058 76
96-3118-0060 63
96-3122-0060 63
96-3129-0058 76
96-3133-0058 76
96-3136-0058 76
96-3137-0058 76
96-5208-0058-E0 58
96-5212-0058 58
96-5215-0058 58
96-5315-0058 58
96-5410-0058 58
96-5416-0058 58
96-5506-0058 58
96-5911-0058 44
96-5912-0058 44
96-5913-0058 44
96-6112-0058 51
96-6304-0058 62
96-6306-0058 62
96-6308-0058 62
96-6404-0058 62
96-6406-0058 62
96-6408-0058 62
96-7108-0058 58
96-7808-0058 57
96-7812-0058 57
96-7815-0058 57
96-7818-0058 57
96-7822-0058 57
96-7914-0058 57
96-7916-0058 57
96-8006-0058 58
96-8008-0058 58
96-8012-0058 57
96-8014-0058 57
96-8016-0058 57
96-8906-0058 60
99-0222-0058 45
105-35025-5 104
105-35134-1 104
105-35134-3 104
105-35134-4 104
105-35134-9 104
105-35183-3 104
105-35251-1 104
105-35251-3 104
105-35308-1 104
106-35203-1 105
106-35203-2 105
106-35203-3 105
106-35203-4 105
106-35203-7 105
106-35231-1 105
106-35231-2 105
106-35231-3 105
106-35231-6 105
106-35267-4 105
106-35292-1 105
106-35292-2 105
111-35114-1 112
111-35306-5 103
112-35127-2 102
112-35127-5 102
112-35127-7 102
112-35225-4 102
113-35075-2 103
113-35075-3 103
161-110-031+924 133
161-120-064+924 133
161-212-054 130
161-600-036 132
162-310-005 141
169-000-004 169
169-000-012 169
169-000-016 169
169-000-018 169
169-000-031 179
169-000-042 169
169-000-054 169
169-000-084 169
169-000-171 167
169-000-174 167
169-000-336 154
169-000-337 154
169-000-338 154
169-000-342 169
169-101-004 135
169-101-607 136
169-102-015 136
169-102-020 135
169-102-506 137
169-104-008 137
169-104-015 136
169-104-020 135
169-106-004 137
169-106-011 136
169-106-015 136
169-106-020 135
169-110-010 136
169-110-015 136
169-110-020 135
169-116-000 135
169-125-015 136
169-125-020 135
169-140-001 136
169-200-008 34
179-990-186 121
200-10406-7 121
200-12007-6 121
200-12009-7 121
200-12399-2 121
200-12523-3 121
200-12553-4 121
200-12553-8 121
200-13017-5 121
200-13017-9 121
200-13022-1 121
200-13022-4 121
200-13022-7 121
200-13037-3 121
200-13092-1 121
201-12015-5 121
201-12018-7 121
201-12019-6 121
201-12019-9 121
201-12021-3 121
201-13608-6 121
201-13741-1 121
202-085-S 131
202-175-30 127
202-275-2 127
206-12124-3 121
207-168-2 123
207-168.U2 123
207-168.U7 123
207-188-2 123
207-188.U11 123
213-870 147
213-870F 147
213-870.U1 147
213-870.U2 147
213-870.U2 147
213-880 147
213-880.U1 147
213-930F 147
220-12238-3 149
222-10365-3 76
222-12047-2 76
222-12047-4 76
222-12047-8 76
222-12521-2 76

Index

222-12521-4 76
222-12521-5 76
222-12521-6 76
222-12521-8 76
222-12578-3 76
222-12578-4 76
222-12578-5 76
222-12578-8 76
222-12578-9 76
222-12599-2 76
222-12599-3 76
222-12599-5 76
222-12599-6 76
222-12599-9 76
222-13618-1 76
222-13618-2 76
222-13618-3 76
222-13618-5 76
222-13670-1 76
222-13678-1 76
222-13678-2 76
222-13678-3 76
222-13678-4 76
222-13678-8 76
222-14180-3 76
222-14180-5 76
222-14180-6 76
222-14180-7 76
222-14180-9 76
223-10055-9 46
223-10057-7 58
223-10057-8 58
223-10080-3 44
223-10187-1 59
223-10263-8 43
223-10297-5 67
223-10297-6 67
223-10297-7 67
223-10307-2 53
223-10313-2 43
223-10313-7 44
223-10364-3 56
223-10364-6 56
223-10374-3 63
223-10389-4 57
223-10530-4 80
223-10540-1 153
223-10540-2 153
223-10550-1 48
223-10550-2 48
223-10550-6 48
223-10550-8 48
223-10563-5 48
223-10563-6 48
223-10563-7 48
223-10563-8 48
223-10670-3 59
223-10688-1 59
223-10814-2 44
223-10889-2 60
223-10986-1 47
223-11089-3 46
223-11185-1 54
223-11229-9 46
223-12270-7 44
223-12270-8 44
223-12270-9 44
223-12271-7 43
223-12271-8 43
223-12272-9 44
223-12272-9 128
223-12273-2 53
223-12273-5 45
223-12284-7 57
223-12285-5 57
223-12285-6 57
223-12285-7 57
223-12285-8 57
223-12285-9 57
223-12286-8 60
223-12287-8 59
223-12288-2 59
223-12290-7 54
223-12291-2 54
223-12291-4 54
223-12291-6 54
223-12292-2 55
223-12292-5 55
223-12292-9 55
223-12295-2 41
223-12295-3 41
223-12295-5 41
223-12295-6 41
223-12295-8 41
223-12295-9 41
223-12296-1 41
223-12296-3 41
223-12296-5 41
223-12296-8 41
223-12296-9 41
223-12359-6 44
223-12360-6 44
223-12360-8 44
223-12361-6 43
223-12361-9 44
223-12362-4 50
223-12362-8 50
223-12363-2 46
223-12363-6 46
223-12364-4 47
223-12365-2 50
223-12366-2 49
223-12366-6 49
223-12367-2 49
223-12367-4 49
223-12368-2 56
223-12368-4 56
223-12368-6 56
223-12368-8 56
223-12369-7 57
223-12369-9 57
223-12372-9 54
223-12373-2 42
223-12373-6 42
223-12373-9 42
223-12374-2 42
223-12374-6 42
223-12374-7 42
223-12374-8 42
223-12374-9 42
223-12377-7 45
223-12377-8 45
223-12380-6 51
223-12409-2 56
223-12409-6 56
223-12409-8 56
223-12409-9 56
223-12429-1 54
223-12432-2 52
223-12432-8 52
223-12452-5 45
223-12452-7 45
223-12452-9 45
223-12453-1 51
223-12454-1 46
223-12454-3 46
223-12454-5 46
223-12454-6 46
223-12454-8 46
223-12455-1 49
223-12455-2 49
223-12455-5 49
223-12456-1 57
223-12456-6 57
223-12456-7 57
223-12456-9 57
223-12477-1 44
223-12477-2 44
223-12477-6 44
223-12477-6 128
223-12477-8 44
223-12477-9 44
223-12479-5 57
223-12479-8 57
223-12479-9 57
223-12480-2 57
223-12480-7 57
223-12481-4 60
223-12481-6 60
223-12481-8 60
223-12482-9 46
223-12483-2 50
223-12483-5 50
223-12483-8 50
223-12484-2 49
223-12484-6 49
223-12485-2 50
223-12485-8 50
223-12531-2 46
223-12531-4 46
223-12531-6 46
223-12531-8 46
223-12531-9 46
223-12533-5 43
223-12533-9 43
223-12535-9 54
223-12539-6 58
223-12541-5 49
223-12542-2 47
223-12542-7 47
223-12542-8 47
223-12562-2 50
223-12562-7 50
223-12562-8 50
223-12563-2 49
223-12563-5 49
223-12563-9 49
223-12564-2 56
223-12564-3 56
223-12564-6 56

Index

223-12564-8 56
223-12567-1 77
223-12571-2 43
223-12573-6 49
223-12577-2 59
223-12577-8 59
223-12580-2 59
223-12582-5 59
223-12583-1 41
223-13016-2 44
223-13016-3 44
223-13016-4 44
223-13016-6 44
223-13016-7 44
223-13016-9 44
223-13021-1 43
223-13021-3 50
223-13021-4 51
223-13021-6 51
223-13021-7 51
223-13023-1 43
223-13023-2 50
223-13023-3 50
223-13024-1 47
223-13024-4 47
223-13024-8 47
223-13025-6 49
223-13028-2 60
223-13028-4 60
223-13032-1 42
223-13032-3 42
223-13032-4 42
223-13032-6 42
223-13032-9 42
223-13033-2 53
223-13040-1 63
223-13040-3 61
223-13040-7 61
223-13040-9 61
223-13048-1 51
223-13048-5 51
223-13048-6 51
223-13048-8 51
223-13049-3 46
223-13050-2 56
223-13050-4 56
223-13051-1 54
223-13051-2 54
223-13052-8 54
223-13054-4 59
223-13057-2 49
223-13057-4 49
223-13057-5 49
223-13069-1 43
223-13079-1 54
223-13096-2 45
223-13610-8 46
223-13610-9 44
223-13614-6 45
223-13614-7 45
223-13614-9 45
223-13615-3 46
223-13615-5 46
223-13615-6 46
223-13616-3 49
223-13619-2 47
223-13619-9 47
223-13620-8 51
223-13621-1 44
223-13621-6 44
223-13621-8 44
223-13622-1 47
223-13622-3 47
223-13622-7 47
223-13629-1 57
223-13638-1 42
223-13638-2 42
223-13638-3 42
223-13638-6 42
223-13638-7 42
223-13638-9 42
223-13639-1 41
223-13639-2 41
223-13639-3 41
223-13639-4 41
223-13639-5 41
223-13639-7 41
223-13639-8 41
223-13639-9 41
223-13640-1 65
223-13640-2 65
223-13640-3 65
223-13640-4 65
223-13640-5 65
223-13640-8 65
223-13640-9 65
223-13643-1 55
223-13643-2 55
223-13643-3 55
223-13643-4 55
223-13643-6 55
223-13643-8 55
223-13655-1 60
223-13655-2 60
223-13655-4 60
223-13655-7 60
223-13658-1 45
223-13658-2 45
223-13658-4 45
223-13658-5 43
223-13658-6 43
223-13658-7 43
223-13658-9 45
223-13665-7 64
223-13665-8 64
223-13665-9 64
223-13669-3 57
223-13669-4 57
223-13671-2 56
223-13671-9 56
223-13672-3 49
223-13672-8 49
223-13675-2 50
223-13677-2 50
223-13677-5 51
223-13679-3 58
223-13679-6 58
223-13679-8 58
223-13679-9 58
223-13685-1 60
223-13686-1 48
223-13692-3 55
223-13693-1 53
223-13693-2 53
223-13693-4 53
223-13693-6 53
223-13693-9 53
223-13694-1 64
223-13694-3 64
223-13694-6 64
223-13694-7 64
223-13698-4 56
223-13699-7 59
223-13700-7 155
223-13700-8 155
223-13700-9 155
223-13702-1 80
223-13702-5 80
223-13702-6 80
223-13702-7 80
223-13702-9 80
223-13705-5 47
223-13706-3 55
223-13715-1 43
223-13715-6 45
223-13715-9 45
223-13732-4 46
223-13732-8 46
223-13749-3 44
223-13749-5 44
223-13759-7 59
223-13761-5 61
223-13761-7 61
223-13766-1 44
223-13766-6 44
223-13766-9 46
223-13770-5 55
223-13770-6 55
223-13785-8 63
223-13791-5 47
223-14082-3 42
223-14082-5 42
223-14082-6 42
223-14083-3 41
223-14089-9 57
223-14092-5 41
223-14102-3 63
223-14116-9 53
223-14129-1 46
223-14129-2 46
223-14129-3 44
223-14129-4 43
223-14130-2 48
223-14130-7 48
223-14130-9 48
223-14152-2 59
223-14171-1 63
223-14171-4 63
223-14171-5 63
223-14171-8 63
223-14184-2 45
223-14184-5 43
223-14187-4 48
223-14187-7 48
223-14189-1 63
223-14189-2 63
223-14189-3 63
223-14189-5 63
223-14189-6 63
223-14189-7 63

Index

223-14189-9 63
223-14190-1 61
223-14190-2 61
223-14190-4 61
223-14190-5 61
223-14190-6 61
223-14190-7 61
223-14214-2 45
223-14214-4 44
223-14214-5 45
223-14214-8 43
223-14214-9 44
223-14215-2 65
223-14215-3 65
223-14215-4 65
223-14215-5 65
223-14234-4 46
223-14234-7 46
223-14238-4 58
223-14240-5 51
223-14241-2 67
223-14241-5 67
223-14241-9 67
223-14244-6 61
223-14244-8 61
223-14253-1 48
223-14253-2 48
223-14253-3 48
223-14253-4 48
223-14253-5 48
223-14256-3 58
223-14256-4 58
223-14268-4 60
223-14268-7 60
223-14293-1 59
223-14293-2 59
223-14293-4 59
223-14293-8 59
223-14304-2 46
223-14304-5 46
223-14304-7 46
223-14418-7 46
223-14420-7 45
223-14420-8 45
223-14424-5 50
223-14464-8 55
223-14464-9 54
223-14497-1 48
223-14497-4 48
223-14497-8 48
226-10159-1 89
226-10159-9 89
226-10205-5 85
226-10214-4 90
226-10214-7 90
226-10223-2 88
226-10223-4 88
226-10223-6 88
226-10622-8 86
226-11313-8 87
226-11313-9 87
226-11315-1 87
226-11315-2 87
226-12335-7 117
226-12337-1 117
226-12337-2 118
226-12337-3 118
226-12337-4 118
226-12337-5 118
226-12337-6 118
226-12338-1 117
226-12338-2 118
226-12338-3 118
226-12338-4 118
226-12338-5 118
226-12338-6 118
226-12343-1 120
226-12343-2 120
226-12343-5 120
226-12508-5 157
226-13058-3 120
226-13058-5 120
226-13095-7 157
226-13097-3 120
226-13673-1 117
226-13673-4 118
226-13673-5 118
226-13673-6 118
226-13716-1 117
226-13716-2 118
226-13716-3 118
226-13716-4 118
226-13716-5 118
226-13717-1 117
226-13717-2 118
226-13717-3 118
226-13717-4 118
226-13718-1 118
226-13718-2 118
226-13718-3 118
226-13753-9 87
226-13756-9 86
226-13773-4 91
226-14097-4 90
226-14097-5 89
226-14111-1 85
226-14111-2 86
226-14111-3 86
226-14111-4 86
226-14123-2 87
226-14123-3 87
226-14123-4 87
226-14123-5 87
226-14139-1 85
226-14157-1 86
226-14157-2 86
226-14157-3 86
226-14157-4 88
226-14157-5 88
233-13651-1 151
233-13651-6 151
233-13651-7 151
233-14419-1 151
234-10396-2 137
234-10396-9 137
234-10898-4 137
234-13101-2 137
234-13101-4 137
234-13132-7 137
234-13132-8 137
234-13156-6 137
234-13182-7 137
234-13182-8 137
235-13108-4 132
235-13114-1 132
243-001.10 73
243-001.20 73
248-602.20 137
248-602.25 137
248-610.01 73
248-803.16 156
248-803.17 156
248-803.20 156
251-10309-1 143
251-10309-2 143
251-10780-2 143
251-14040-1 143
251-14040-2 143
251-14040-3 143
251-14040-4 143
251-14040-5 143
251-14044-8 143
251-14045-1 143
251-14045-8 143
251-14063-1 143
251-14063-4 143
251-14063-9 143
251-14073-9 143
251-14109-2 143
251-14109-3 143
267-001.03 73
267-001.13 18
267-001.17 18
267-001.19 18
267-001.36 73
267-001.47 73
267-001.60 73
301-001 18
301-001DK 24
301-005 18
301-005-S3 18
301-020 18
301-020 127
301-020 128
301-020-S3 18
301-034 74
301-134 74
303-17546-1 149
304-16337-1 74
304-19167-1 74
304-19230-1 74
304-19437-1 74
304-19509-1 74
304-19548-1 74
304-19787-1 74
321-581 99
322-581 99
322-861 99
323-581 99
324-581 99
324-861 99
325-581 99
326-581 99
326-663 99
328-581 99
328-861 99
330-581 99
330-861 99
332-861 99
334-861 99

Index

336-861 . . . 99
338-861 . . . 99
340-861 . . . 99
401-004-512 . . . 17
401-004-903 . . . 17
401-004-904 . . . 17
401-011-132 . . . 73
401-013-131 . . . 73
401-013-161 . . . 73
401-013-171 . . . 73
401-016-312 . . . 73
401-016-371 . . . 73
401-019-132 . . . 73
401-019-352 . . . 73
401-504-192 . . . 35
401-504-292 . . . 35
401-506-313 . . . 35
402-001 1) . . . 14
402-002 . . . 15
402-003 . . . 18
402-003K . . . 17
402-004 . . . 18
402-006 . . . 18
402-006K . . . 17
402-008K . . . 17
402-011 . . . 80
402-116-161 . . . 26
402-116-165 . . . 26
402-603 . . . 15
402-606-191 . . . 32
402-611 . . . 16
402-612 . . . 16
403-006-651 . . . 29
404-001 . . . 14
404-001-S3 . . . 14
404-002 . . . 15
404-002-S3 . . . 15
404-003 . . . 18
404-003DK . . . 24
404-003K . . . 17
404-003-S8-VS . . . 93
404-003-VS . . . 93
404-004 . . . 18
404-005 . . . 18
404-006 . . . 18
404-006DK . . . 24
404-006K . . . 17
404-006-S8-VS . . . 93
404-006-VS . . . 93
404-008 . . . 25
404-009 . . . 25
404-010 . . . 24
404-011 . . . 80
404-040 . . . 18
404-040K . . . 17
404-040K-US . . . 17
404-040K-V1-VS . . . 93
404-040-VS . . . 93
404-045 . . . 17
404-047K . . . 17
404-054K . . . 17
404-061 . . . 18
404-063 . . . 18
404-063-VS . . . 93
404-072 . . . 17
404-073-VS . . . 93
404-162 . . . 18
404-164 . . . 18
404-203 . . . 27
404-405-S3 . . . 50
404-603 . . . 15
404-611 . . . 16
404-612 . . . 16
404-612-MS . . . 16
404-662K . . . 17
404-663K . . . 17
404-673K . . . 17
404-673K-V1-VS . . . 93
405-549-049 . . . 34
405-551-049 . . . 34
405-619-061 . . . 32
406-001 . . . 14
406-001-S3 . . . 14
406-002 . . . 15
406-002-S3 . . . 15
406-004 . . . 18
406-004DK . . . 24
406-004K . . . 17
406-004-S3 . . . 18
406-004-S8-VS . . . 93
406-004-VS . . . 93
406-005 . . . 25
406-008 . . . 25
406-010 . . . 24
406-011 . . . 80
406-024 . . . 73
406-044-S1 . . . 72
406-045K . . . 75
406-054 . . . 18
406-054 . . . 127
406-054K . . . 17
406-054-VS . . . 93
406-055 . . . 18
406-089K . . . 75
406-090K . . . 75
406-091K . . . 75
406-092K . . . 75
406-093K . . . 75
406-094K . . . 75
406-103 . . . 27
406-145K . . . 75
406-155K . . . 75
406-158 . . . 18
406-158-S3 . . . 18
406-158-VS . . . 93
406-162 . . . 18
406-162-S8-VS . . . 93
406-162-VS . . . 93
406-163 . . . 18
406-165K . . . 75
406-166 . . . 18
406-167 . . . 18
406-203 . . . 27
406-233 . . . 27
406-243-B . . . 27
406-351 . . . 41
406-352 . . . 42
406-361 . . . 41
406-362 . . . 42
406-423N-VS . . . 93
406-423W-VS . . . 93
406-426-VS . . . 94
406-603 . . . 15
406-611 . . . 16
406-612 . . . 16
406-612-MS . . . 16
406-613 . . . 15
406-704-001 . . . 111
406-704-001-VS . . . 111
406-706-001 . . . 111
406-706-001-VS . . . 111
406-708-001 . . . 111
406-708-001-VS . . . 111
406-708-005 . . . 113
406-708-005-S3 . . . 113
406-708-005-VS . . . 113
406-708-006 . . . 113
406-708-007 . . . 113
406-708-008 . . . 113
406-708-009 . . . 113
406-710-002 . . . 113
406-804-001 . . . 111
406-805 . . . 24
406-806-001 . . . 111
406-808-001 . . . 111
406-808-005 . . . 113
406-808-005-S3 . . . 113
406-810-002 . . . 113
408-001 . . . 14
408-001-S3 . . . 14
408-004 . . . 18
408-004-S8-VS . . . 93
408-004-VS . . . 93
408-005 . . . 18
408-006 . . . 18
408-008 . . . 25
408-010 . . . 24
408-011 . . . 80
408-013 . . . 28
408-022 . . . 18
408-023 . . . 27
408-033-S3 . . . 27
408-054-VS . . . 93
408-103 . . . 27
408-120 . . . 35
408-154 . . . 18
408-160 . . . 18
408-160 . . . 128
408-162 . . . 18
408-162-S8-VS . . . 93
408-162-VS . . . 93
408-202 . . . 15
408-202-S3 . . . 15
408-211 . . . 80
408-243-B . . . 27
408-313 . . . 46
408-351 . . . 41
408-352 . . . 42
408-361 . . . 41
408-362 . . . 42
408-413 . . . 43
408-425W . . . 51
408-453W . . . 44
408-603 . . . 15
408-611 . . . 16
408-612 . . . 16
408-612-MS . . . 16
410-001 . . . 14
410-002 . . . 15
410-003 . . . 27

Index

410-003-B 27
410-004. 19
410-004DK 24
410-008. 25
410-010. 24
410-011. 80
410-013. 28
410-018. 19
410-022. 19
410-160. 19
410-162. 19
410-163. 19
410-163. 127
410-163. 128
410-164. 19
410-169. 19
410-171 19
410-313. 46
410-403-S3 43
410-405. 50
410-413 43
410-443. 43
410-443W 44
410-603. 15
410-611 16
410-612. 16
410-612-MS 16
412-001. 14
412-002. 15
412-004. 19
412-008. 25
412-010. 24
412-011 80
412-014 19
412-162 19
412-163 19
412-163 128
412-164 19
412-169 19
412-403. 43
412-405W 51
412-407 49
412-409. 56
412-423. 43
412-423W 179
412-433. 43
412-453. 43
412-453W 44
412-603. 15
412-611 16
412-612 16
415-403. 43
415-413 43
415-443W 44
418-403. 43
418-405W 51
418-407. 49
418-409. 56
418-413W 44
422-416. 56
428-21543-2. 149
428-21544-1. 148
428-21544-1. 149
428-21545-1. 149
428-21546-2 149
432-23031-1. 113
432-23077-1 161
432-23676-1. 113
432-24043-1. 75
432-24050-1. 75
432-24051-1. 75
432-24052-1. 75
432-24162-1. 113
432-70024-1. 144
432-70673-1. 75
432-70674-1 75
432-71483-1 75
441-108-132. 60
443-218-001. 50
443-290-001 50
443-306-343. 63
443-410-161. 61
443-410-211. 61
443-418-181. 61
445-513-181. 58
445-516-061. 58
445-517-222. 58
445-519-041-VS 94
445-535-101. 57
445-713-152 62
445-717-221 62
445-721-121 62
445-735-101. 62
445-739-152. 62
445-806-351 63
445-910-551. 62
446-308-001 52
446-310-001 52
446-312-001. 52
446-315-001. 52
446-318-001 52
450-204-002 97
450-206-002 97
451-004-260-VS 93
451-004-462-VS 93
451-004-471-VS. 93
451-004-498-VS 93
451-004-518-VS 93
451-006-468-VS 93
451-006-498-VS 93
451-006-518-VS 93
453-004-471-S8-VS 95
453-004-471-VS 95
453-006-468-S8-VS. 95
453-006-468-VS 95
454-504-041-VS 94
455-529-048-S8-VS 97
455-529-048-VS 97
455-529-068-S8-VS 97
455-529-068-VS 97
455-531-048-S8-VS 97
455-531-048-VS 97
455-531-068-S8-VS 97
455-531-068-VS 97
455-546-048-S8-VS 97
455-546-048-VS 97
455-546-068-VS 97
455-565-068-VS 95
455-565-068-VS 97
455-569-048-VS 97
456-004K 17
456-004-S8-VS 93
456-004-VS 93
458-012. 27
458-012-B 27
460-708-001 67
466-419-001. 80
466-429-001 80
466-431-001. 80
466-431-005. 79
466-431-006 79
466-431-009 79
466-439-001 80
471-004-191. 67
471-004-311. 67
471-006-161. 67
471-006-192. 67
471-006-311. 67
471-006-319. 68
471-006-320. 68
471-006-351. 67
471-008-130. 67
471-008-131. 67
471-008-132. 68
471-008-161. 67
471-008-211. 67
471-008-314. 67
471-008-318. 68
471-008-345. 67
471-008-351. 67
471-008-391. 67
471-010-161. 67
471-010-211. 67
471-010-312. 67
471-010-312. 68
471-010-318. 68
471-010-351. 67
471-010-391. 67
471-012-161 67
471-012-211 67
471-012-312 68
471-012-391. 67
473-808-371. 59
473-808-392. 59
474-506-061. 69
474-508-081. 69
474-510-101 69
474-512-121 69
474-515-151 69
474-518-181 69
474-606-331. 68
474-608-351. 68
474-610-351. 68
474-612-391 68
474-615-431 68
474-618-441 68
476-006-001. 69
476-008-001. 69
476-010-001. 69
476-012-001. 69
476-015-001. 69
502-051. 31
502-051. 31
502-052. 31
502-053. 31
502-053. 31
502-054. 31
502-054. 31
502-056. 31
502-056. 31

Index

502-101 31
502-102 31
502-154. 31
502-161 31
502-206K 29
504-003 28
504-004. 20
504-008 22
504-019. 81
504-019-AL. 81
504-027. 31
504-027. 31
504-045. 23
504-051. 33
504-051. 33
504-051. 33
504-052. 31
504-052. 31
504-052. 32
504-052. 32
504-052. 32
504-054. 31
504-054. 31
504-054. 33
504-056. 32
504-056. 33
504-071. 33
504-071. 33
504-071. 33
504-072. 31
504-072. 32
504-073. 31
504-073. 33
504-075. 32
504-100-VS 96
504-101. 31
504-101-S8-VS 96
504-101-VS 96
504-102. 31
504-102-S8-VS 96
504-102-VS 96
504-103. 28
504-103-VS 94
504-105. 32
504-106. 33
504-108. 31
504-108-S8-VS 96
504-108-VS 96
504-109. 33
504-110. 33
504-111. 33
504-112. 33
504-114. 32
504-115. 32
504-161 31
504-161-VS. 94
504-162 31
504-200K 30
504-200K-V1-VS 95
504-201K 30
504-201-S8-VS 95
504-201-VS 95
504-202K 30
504-202-S8-VS 95
504-202-VS 95
504-203K 30
504-401 31
504-401-S1-VS 94
504-401-VS 94
504-411 31
504-411-VS. 94
504-412. 47
504-510K. 29
504-651. 31
504-651. 31
504-851. 31
504-851. 31
504-37184-2. 144
504-37210-1. 144
504-37211-1. 144
506-004 28
506-005 31
506-005 31
506-005 32
506-005 32
506-006 32
506-006 32
506-006 33
506-007. 33
506-007. 33
506-007. 33
506-008 22
506-010. 20
506-012. 31
506-013. 32
506-014. 33
506-018. 32
506-025. 33
506-026 33
506-030 31
506-030 32
506-030 32
506-030 32
506-032. 33
506-032. 33
506-032. 33
506-033 31
506-033 31
506-033 32
506-034. 31
506-034. 32
506-101. 32
506-108. 31
506-108-S8-VS 96
506-108-VS 96
506-114. 32
506-139-S8-VS 96
506-139-VS 96
506-140. 31
506-140-S8-VS 96
506-140-VS 96
506-142. 31
506-142-S8-VS 96
506-142-VS 96
506-143-VS. 96
506-145. 31
506-202K 29
506-214. 31
506-242. 33
506-342. 32
506-345. 32
506-346. 32
506-408 22
506-442. 33
506-508K 29
506-508-S8-VS 95
506-508-VS 95
506-510K. 29
506-510-S8-VS 95
506-510-VS 95
506-511-K. 29
506-511K-V1-VS 95
506-511-S8-VS 95
506-511-VS. 95
506-512K. 29
508-002-2 22
508-005 33
508-005 33
508-005 33
508-005 33
508-006 31
508-006 31
508-006 33
508-006 33
508-007. 31
508-007. 31
508-007. 32
508-007. 32
508-007. 32
508-008 32
508-008 32
508-008 33
508-008 33
508-012. 32
508-013. 33
508-014. 33
508-023 31
508-023 31
508-023 31
508-023 33
508-024 31
508-025 33
508-030 31
508-030 32
508-030 32
508-030 32
508-032. 33
508-032. 33
508-032. 33
508-033 32
508-034 32
508-054. 31
508-054. 32
508-108. 81
508-108. 128
508-108. 128
508-142. 31
508-142-S8-VS 96
508-142-VS 96
508-144. 31
508-145. 31
508-215-CU 81
508-242. 33
508-303 32
508-303 32
508-303 33
508-303 33
508-304 32
508-305 33
508-320-CU 81

Index

508-342 32
508-345 32
508-346 32
508-442 33
508-512K 29
508-602-2 22
510-010 32
510-010 32
510-010 32
510-017 31
510-017 31
510-017 31
510-023 31
510-023 32
510-024 31
510-041 31
510-041 32
510-041 32
510-042 33
510-044 31
510-044 32
510-044 32
510-102 22
510-142 31
510-145 31
510-242 33
510-341 32
510-342 32
510-343 32
510-344 32
510-346 32
510-410 47
510-413 47
512-412 47
514-018K 29
514-018K-S1 30
514-018K-V1-VS 95
514-018-S8-VS 95
514-018-VS 95
515-410 47
525-32080-1 133
525-32081-1 133
525-32082-1 133
525-32083-1 133
525-32084-1 133
525-32085-1 133
525-32086-1 133
525-32087-1 133
525-32098-1 133
528-31341-3 148
528-36045-6 148
532-30739-1 113
532-32131-1 144
532-32248-1 144
532-32454-1 144
558-012 31
558-012 31
558-012 31
558-012 33
558-012 33
558-012 33
558-612 32
558-612 32
558-612 33
558-612 33
558-812 32
558-812 32
558-812 32
558-812 33
558-812 33
558-912 32
558-912 32
558-912 32
558-913 32
568-342 32
568-442 33
586-342 32
586-442 33
602-001 117
602-002 117
604-001 117
604-002 117
604-003 117
604-004 119
604-014 118
604-015 118
604-016 118
604-018 118
604-36879-1 158
606-010 117
606-014 119
608-001 117
608-003 117
608-004 119
610-001 117
610-004 119
612-001 117
624-25294-1 129
624-25465-1 129
624-25478-1 129
624-25479-1 129
624-25480-1 129
624-25481-1 129
624-25482-1 129
624-25483-1 129
624-27092-1 129
626-25438-2 77
626-25540-2 77
626-25702-1 77
626-25716-2 77
626-25717-2 77
626-26246-1 123
626-26696-2 77
626-26700-2 77
626-26701-2 77
628-25531-2 148
628-26452-2 148
628-36062-3 148
638-37548-1 167
638-37549-2 167
651-28685-1 140
651-28691-1 140
651-29124-1 140
714-180 106
714-180-K 107
714-180-M 106
714-180-MK 107
714-180-M-VS 108
714-180-VS 108
714-220 106
714-220-K 107
714-220-VS 108
714-260 106
714-260-K 107
714-260-M 106
714-260-MK 107
714-260-M-VS 108
714-260-VS 108
714-300 106
714-300-K 107
714-300-M 106
714-300-MK 107
714-300-M-VS 108
714-300-VS 108
714-380 106
714-380-K 107
714-380-VS 108
714-400-M 106
714-400-MK 107
714-400-M-VS 108
714-420 106
714-420-K 107
714-420-VS 108
714-450 106
714-450-K 107
714-450-VS 108
714-500 106
714-500-K 107
714-500-M 106
714-500-MK 107
714-500-M-VS 108
714-500-VS 108
714-580 106
714-580-K 107
714-580-M 106
714-580-MK 107
714-580-M-VS 108
714-580-VS 108
716-220 106
716-220-K 107
716-220-VS 108
716-300 106
716-300-K 107
716-300-M 106
716-300-MK 107
716-300-M-VS 108
716-300-VS 108
716-340 106
716-340-K 107
716-380 106
716-380-K 107
716-380-VS 108
716-400-M 106
716-400-MK 107
716-400-M-VS 108
716-420 106
716-420-K 107
716-420-VS 108
716-450-MK 107
716-450-M-VS 108
716-500 106
716-500-K 107
716-500-M 106
716-500-MK 107
716-500-M-VS 108
716-500-VS 108
716-580 106
716-580-K 107
716-580-VS 108
718-340 106

Index

718-340-VS 108
718-400-K 107
718-400-M 106
718-400-MK 107
718-400-M-VS 108
718-450 106
718-450-K 107
718-450-MK 107
718-450-M-VS 108
718-450-VS 108
718-500-K 107
718-500-M 106
718-500-MK 107
718-500-M-VS 108
718-580 106
718-580-VS 108
734-180 109
734-180-K 109
734-180-VS 110
734-220 109
734-220-K 109
734-220-VS 110
734-260 109
734-260-K 109
734-260-VS 110
734-300 109
734-300-K 109
734-300-VS 110
734-380 109
734-380-K 109
734-380-VS 110
734-420 109
734-420-K 109
734-420-VS 110
734-450 109
734-450-K 109
734-450-VS 110
734-500 109
734-500-K 109
734-500-VS 110
734-580 109
734-580-K 109
734-580-VS 110
833-020-022 79
833-330-016 79
833-330-021 79
833-340-034 79
843-130-021 72
843-130-022 72
843-130-023 72
844-330-006 154
844-330-007 154
844-330-007 154
853-370-002 113
853-370-002-VS 113
853-380-002 113
853-380-002-VS 113
853-380-003 113
853-380-003-VS 113
853-380-004 113
853-380-004-VS 113
853-380-005-VS 113
853-380-006-VS 113
853-380-007-VS 113
853-390-002 113
853-390-002-VS 113
853-390-003 113
853-390-003-VS 113
853-390-004 113
853-390-004-VS 113
853-390-005 113
853-390-005-VS 113
853-390-006-VS 113
853-540-010 113
853-750-024 27
855-380-002 113
855-380-002-VS 113
855-380-003 113
855-380-003-VS 113
871-340-006 145
871-340-008 145
871-360-006 145
871-360-008 145
871-380-006 145
871-380-008 145
871-390-020 145
871-390-023 145
898-510-000 120
898-610-000 120
898-710-000 120
898-710-001 120
902-111 14
904-411 14
906-411 14
908-411 14
910-411 14
912-411 14
917-877 160
941-206-104 119
941-206-108 119
941-208-104 119
941-209-104 119
941-209-105 119
941-210-104 119
941-212-104 119
941-213-104 119
941-215-104 119
941-217-104 119
941-217-105 119
941-218-101 119
941-220-104 119
941-222-100 119
941-225-104 119
941-606-000 120
941-608-000 120
941-610-000 120
982-120-040 104
982-120-041 104
982-120-061 104
982-120-100 104
982-120-180 104
982-750-111 112
982-760-102 103
982-760-120 103
982-760-122 103
982-760-130 103
982-760-132 103
982-760-142 103
982-760-160 103
982-760-172 103
995-000-705 124
995-000-705 179
995-001-096 124
995-001-096 171
995-001-104 21
995-001-106 21
995-001-235 124
995-001-500 124
995-001-500 124
995-001-500 171
995-001-500 179
995-001-501 124
995-001-502 124
995-001-503 124
995-001-504 124
995-001-525 123
995-001-526 123
995-001-620 125
995-001-621 125
995-001-622 125
995-001-623 125
995-001-950 124
995-002-073 124
995-003-040 141
995-003-041 141
995-003-042 141
995-003-043 141
995-003-044 141
995-014-014 26
995-340-000 26
995-340-000-S8 26
995-340-350 26
995-340-350-S8 26
995-350-000 26
995-350-000-S8 26
996-001-890 143
001013 163
1110-00000001 112
1110-00000002 112
001142 163
001709 173
2230-00000116 60
2230-00000155 34
005841 159
068874 151
82050 173
82054 173
091308 77
274681 173
11396555 171
11396557 171
11396558 171
11600330 171
11600340 171
11600400 171
11650850 171
11770415 171
11770417 171
11770462 171
11770464 171
AC-2879 151
AC-3398 151
B3.U21 140
B7 141
B7.U271 140
BW3-2-S1 141
BW7-S6 141
BW7-S7 141
BW7-S8 141
BW7-S11 141

Index

BW7-S14 141
D301-001-MS. 18
D301-005-MS. 18
D301-020-MS. 18
D408-004-MS 18
D1127R02.5x0.5+A46 . . . 105
D72573-6x8ST+ZZ1 118
DAK504-S1 36
DAK506 36
DAK508 36
DAK510 36
DAK510-S1 37
DAK512 36
DAR506 20
DAR508 20
DAR510 20
DAR510-S1 20
DAR524 21
DAR534 21
DAT506 23
DAT508 23
DAT510 23
DAT510-S1 23
DAT510-S5 23
DAT512 23
DIN908-G1-8A-5.8. 80
DIN908-G3-8A-5.8 80
DIN908-M10x1-5.8 80
DIN908-M12x1.5-5.8 80
DIN908-M14x1.5-5.8 80
DIN910-R1-2-5.8 80
DIN910-R1-4x8-5.8 80
DIN910-R1-5.8 80
DIN910-R1-8-5.8 80
DIN910-R3-4-5.8 80
DIN910-R3-8-5.8. 80
DIN912-M3x8-A4 121
DIN931-M6x30-8.8 121
DIN933-M4x10-8.8 121
DIN2462-R04x1+A46 105
DIN2462-R010x1+A46 . . . 105
DIN7513-BM4x20 121
DIN7513-BM4x25 121
DIN7513-BM6x25 121
DIN7603-A6x10-CU 81
DIN7603-A8x11.5-CU. 81
DIN7603-A12x18-CU 81
DIN7603-A14x18-CU 81
DIN7603-A16x20-CU 81
DIN7603-A17x21-CU 81
DIN7603-A18x22-CU 81
DIN7603-A20x24-CU 81
DIN7603-A21x26-CU 81
DIN7603-A22x27-CU 81
DIN7603-A27x32-CU 81
DIN7603-A30x36-CU 81
DIN7603-A33x39-CU 81
DIN72573-2x6-ST. 118
DIN72573-2x8-ST. 118
DIN72573-2x10-ST. 118
DIN72573-3x6-ST. 118
DIN72573-3x8-ST. 118
DIN72573-3x10-ST. 118
DIN72573-4x6-ST. 118
DIN72573-4x8-ST. 118
DIN72573-4x10-ST. 118
DIN72573-5x6-ST. 118
DIN72573-5x8-ST. 118
DIN72573-5x10-ST. 118
DIN72573-6x6-ST. 118
DLY930-2. 78
DLY931. 78
DLY932. 78
DY958 30
DY960 30
DY961. 30
DY962 30
DY964. 23
DZ333 73
DZ334. 73
K1 139
K3-S2. 139
K6-S5. 139
KW1 139
KW1-S2 139
KW3-S1 139
KW6-S1 139
KW6-S2 139
LAGN 120. 145
LAGT 18-50 171
P-78.01 73
TK-350-V. 139
TK-350-VM 139
TK-350-VMC 139
UC.1010.100 151
UC-1066-01 151
UC-1066-02 151
UC-1066-03 151
UC-1066-04 151
UC-1066-05 151
UC-1066-06 151
UC-1066-10 151
UC-1066-14. 151
UFZ.0097. 132
VL-01DAM3. 99
VL-01EAM3 99
VL-02DAM3. 99
VL-02EAM3 99
VL-03DAM3. 99
VL-03EAM3 99
VL-04DAM3. 99
VL-04EAM3 99
VL-05DAM3. 99
VL-05EAM3 99
VL-06DAM3. 99
VL-06EAM3 99
VL-08DAM3. 99
VL-08EAM3 99
VL-10DAM3 99
VL-10EAM3 99
WVN200-4A0.4. 130
WVN200-4A0.4-S1 130
WVN200-4A5 130
WVN200-4A8 130
WVN200-4A12 130
WVN200-4A16 130
WVN200-4A25 130
WVN200-6B0.5 130
WVN200-6B3 130
WVN200-6B8 130
WVN200-6B12 130
WVN200-6B16 130
WVN200-6B20 130
WVN200-6B40 130
WVN200-8B0 130
WVN200-8B3 130
WVN200-8B5 130
WVN200-8B12 130
WVN200-8B16 130
WVN200-8B20 130
WVN200-8B32 130
WVN200-8D50 131
WVN200-8D75 131
WVN200-8D120 131
WVN200-8D220. 131
WVN200-10B0 130
WVN200-10B0.5 130
WVN200-10B1 130
WVN200-10B32 130
WVN200-10D120-S1. . . . 131
WVN200-10D220-S1. . . . 131
WVN200-10E6 128
WVN200-10E12 128
WVN200-10E12-S8 128
WVN200-10E25 128
WVN200-10E25-S8 128
WVN200-10E35 128
WVN200-10E60 128
WVN200-10E60-S8 128
WVN701-4. 111
WVN701-6. 111
WVN701-8. 111
WVN711-10. 112
WVN715-R02.5X0.5 102
WVN715-R04X0.85 102
WVN715R04X0.85+A89 . . 102
WVN715-R06X1 102
WVN715-R06X1.25 102
WVN715R06X1.25+A89 . . 102
WVN715-R08x1.25. 102
WVN715-R010X1.5. 102
WVN715R010X1.5+A89 . . 102
WVN716-R04X0.85 102
WVN716R04X0.85+A89 . . 102
WVN716-R06X1.25 102
WVN716R06X1.25+A89 . . 102
WVN716-R08X1.25 102

Important information on product usage
SKF and Lincoln lubrication systems or their components are not approved for use with gases, liquefied gases, pressurized gases in solution and fluids with a vapor pressure exceeding normal atmospheric pressure (1 013 mbar) by more than 0,5 bar at their maximum permissible temperature.

skf.com | skf.com/lubrication

® SKF and LINCOLN are registered trademarks of the SKF Group.

© SKF Group 2026
The contents of this publication are the copyright of the publisher and may not be reproduced (even extracts) unless prior written permission is granted. Every care has been taken to ensure the accuracy of the information contained in this publication but no liability can be accepted for any loss or damage whether direct, indirect or consequential arising out of the use of the information contained herein.

PUB LS/P1 15859 EN · January 2026

Certain image(s) used under license from Shutterstock.com